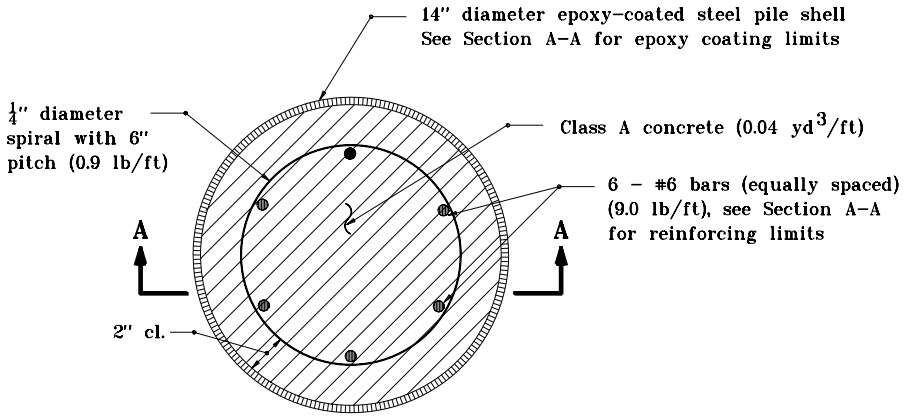

PLAN

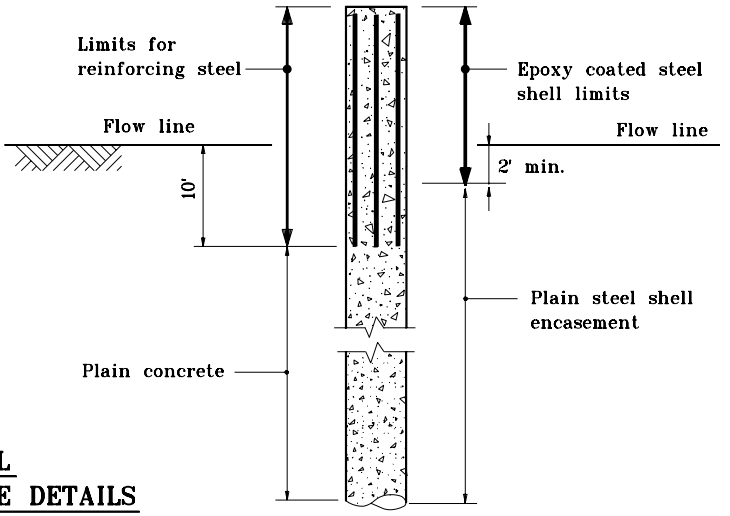

SECTION A-A

EPOXY COATED STEEL SHELL ENCASED REINFORCED CONCRETE PILE DETAILS

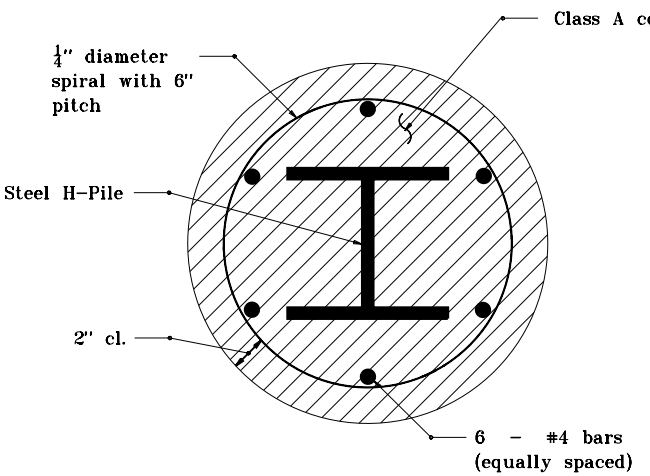

PLAN

TABLE OF MATERIALS

Steel H-Pile designation	Minimum pile diameter	Reinforcing steel lb/ft	Class A concrete yd³/ft
HP 14	2'-3	5.8	0.12
HP 12	2'-0	5.6	0.10
HP 10	1'-9	5.4	0.08

STEEL H - PILES REINFORCED CONCRETE ENCASED DETAIL

INDIANA DEPARTMENT OF TRANSPORTATION

REINFORCED CONCRETE PILE DETAILS

MAY 1998

STANDARD DRAWING NO. E 701-BPIL-02

ANTHONY L. UREMOVICH REGISTERED No. 18095 STATE OF INDIANA PROFESSIONAL ENGINEER

DESIGN STANDARDS ENGINEER

DETAILS PLACED IN THIS FORMAT 11-15-99

/s/ Anthony L. Uremovich 11-15-99
DESIGN STANDARDS ENGINEER DATE

/s/ Firooz Zandi 11-15-99
CHIEF HIGHWAY ENGINEER DATE

ORIGINALLY APPROVED 5-01-98