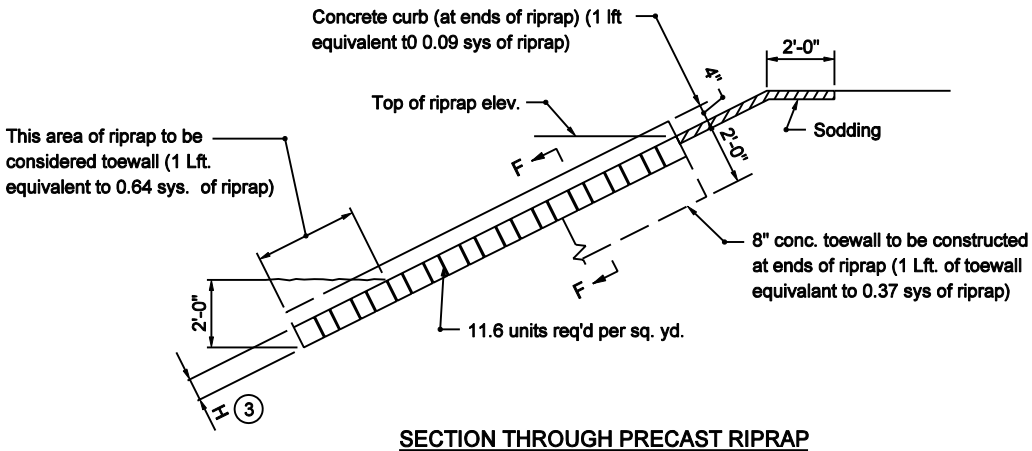

SECTION THROUGH PRECAST RIPRAP

NOTES

1. See Standard Drawing E 616-SWRR-01 for Section F-F.
2. If riprap is specified, 1'-0" hand-laid riprap or precast concrete riprap type A may be used.

3 Precast conc. riprap
Type A: H = 7⅝" (8" nom.)
Type B: H = 3⅝" (4" nom.)

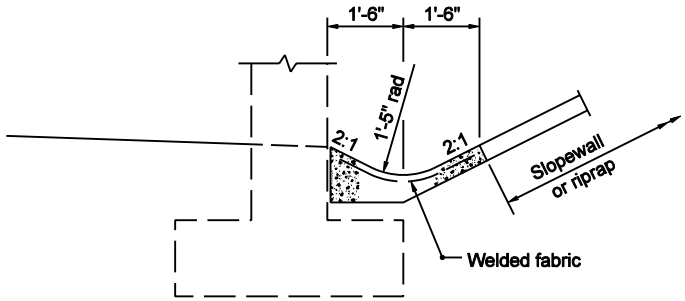

SECTION THROUGH PAVED DITCH AT TOE OF SLOPE

(See layout on plans for location of paved ditch)

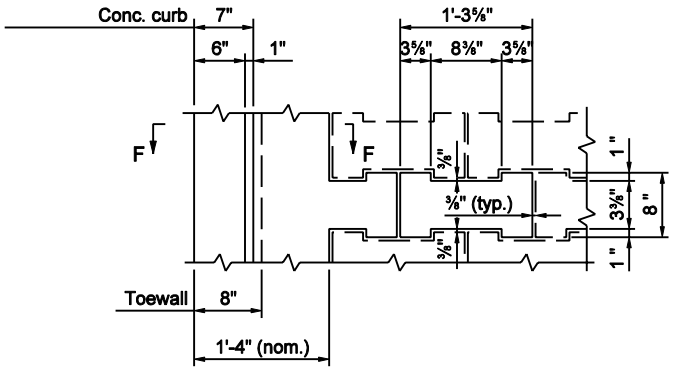

PLAN - PRECAST CONCRETE RIPRAP

INDIANA DEPARTMENT OF TRANSPORTATION

RIPRAP SLOPEWALL DETAILS

SEPTEMBER 2003

STANDARD DRAWING NO. E 616-SWRR-02

RICHARD L. VanCLEAVE REGISTERED No. 9750 STATE OF INDIANA PROFESSIONAL ENGINEER

DESIGN STANDARDS ENGINEER

/s/ Richard L. VanCleave 9-02-03
DESIGN STANDARDS ENGINEER DATE

/s/ Richard K. Smutzer 9-02-03
CHIEF HIGHWAY ENGINEER DATE