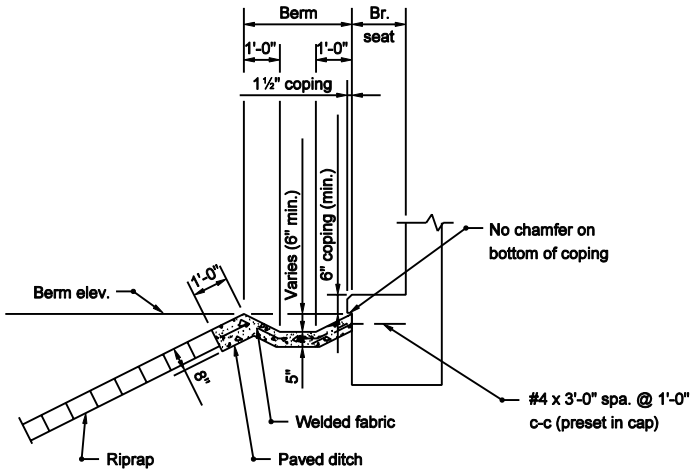

SECTION D-D

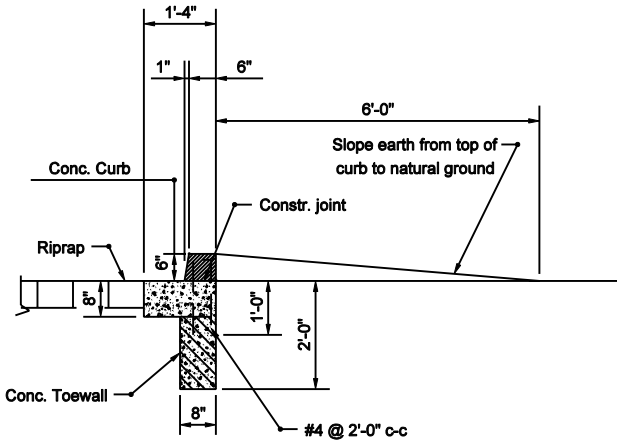

SECTION F-F

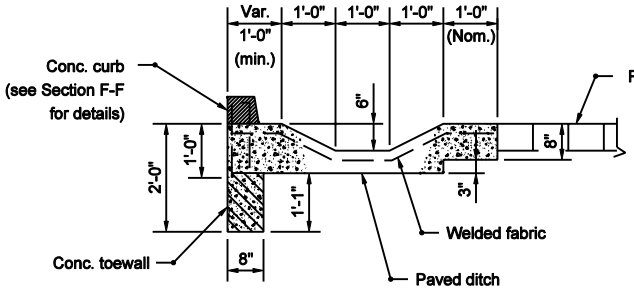

SECTION E-E

Where riprap terminates 2'-0" outside of coping line

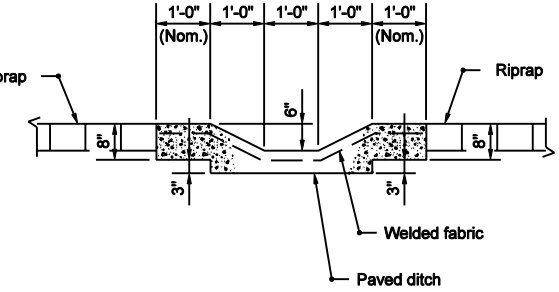

SECTION E-E

Where riprap terminates more than 2'-0" outside of coping line

INDIANA DEPARTMENT OF TRANSPORTATION

RIPRAP SLOPEWALL DETAILS

SEPTEMBER 2003

STANDARD DRAWING NO. E 616-SWRR-01

RICHARD L. VANCLEAVE REGISTERED No. 9750 STATE OF INDIANA PROFESSIONAL ENGINEER

DESIGN STANDARDS ENGINEER

/s/ Richard L. VanCleave 9-02-03
DESIGN STANDARDS ENGINEER DATE

/s/ Richard K. Smutzer 9-02-03
CHIEF HIGHWAY ENGINEER DATE