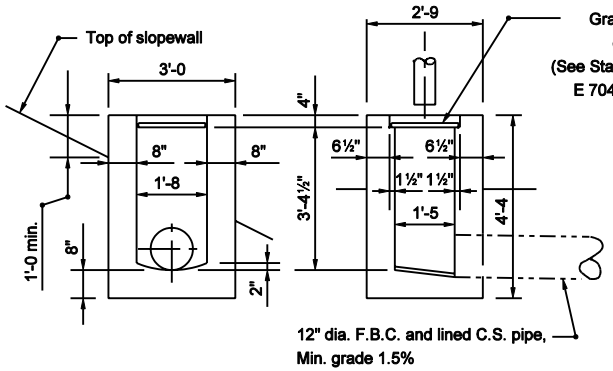

SECTION B-B SECTION C-C

DETAIL OF CONCRETE INLET TYPE U

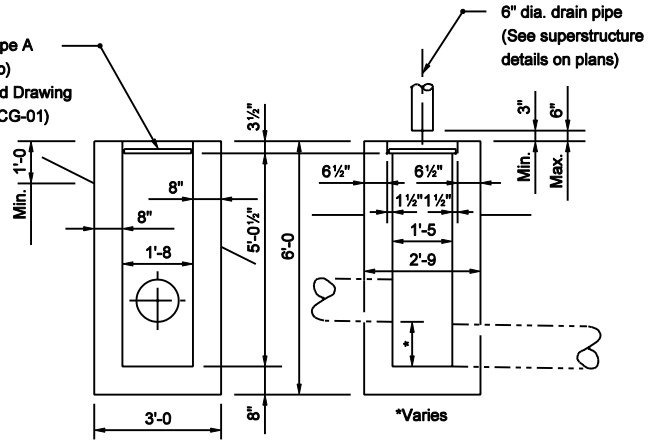

SECTION D-D SECTION E-E

DETAIL OF CONCRETE INLET TYPE W

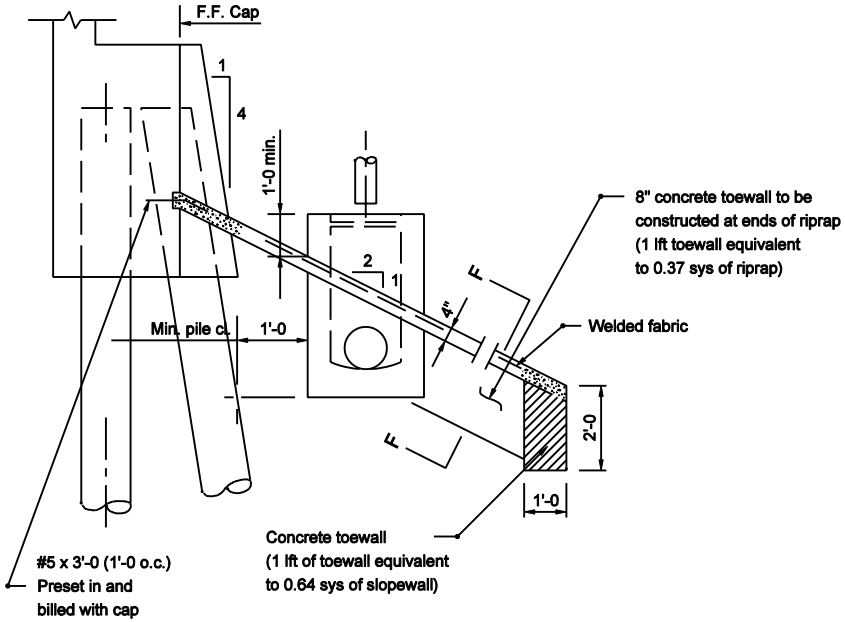

SECTION A-A

TYPICAL ELEVATION THRU SLOPEWALL

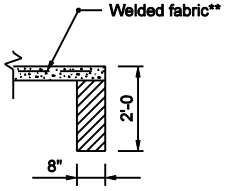

SECTION F-F

INDIANA DEPARTMENT OF TRANSPORTATION

SLOPEWALL AND DRAINAGE DETAILS

SEPTEMBER 2003

STANDARD DRAWING NO. E 616-SWCO-06

RICHARD L. VanCLEAVE REGISTERED No. 9750 STATE OF INDIANA PROFESSIONAL ENGINEER

DESIGN STANDARDS ENGINEER

/s/ Richard L. VanCleave 9-02-03
DESIGN STANDARDS ENGINEER DATE

/s/ Richard K. Smutzer 9-02-03
CHIEF HIGHWAY ENGINEER DATE