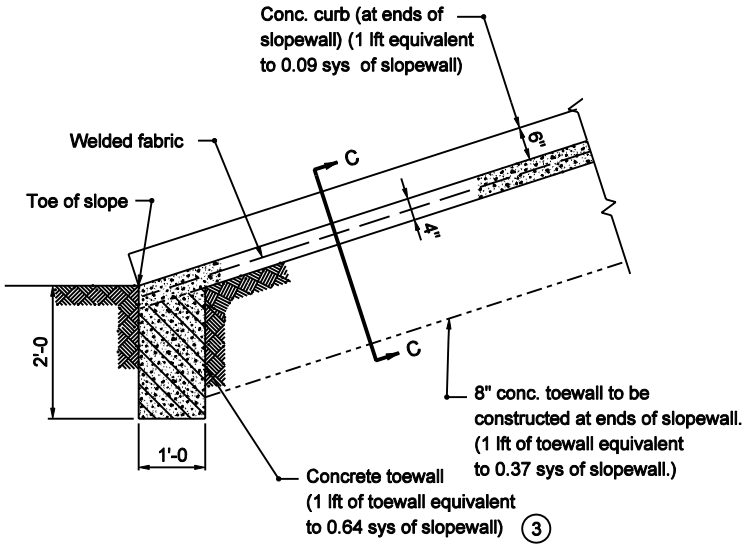


SECTION THROUGH CONCRETE SLOPEWALL

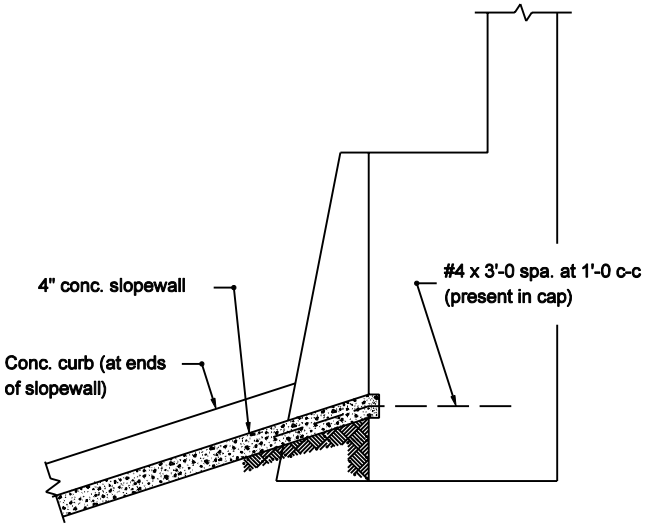


TYPICAL SECTION THROUGH SLOPEWALL AT STRUCTURES WITHOUT BERMS

## GENERAL NOTES

1. See Section F-F on Standard Drawing E 616-SWCO-03 for Section C-C.
2. When hand-laid riprap is used under a structure, drainage configuration similar to that shown for precast concrete riprap shall be used. See Standard Drawing E 616-SWRR-02 for such configuration.

3 Toewall is not required adjacent to piers or bents.

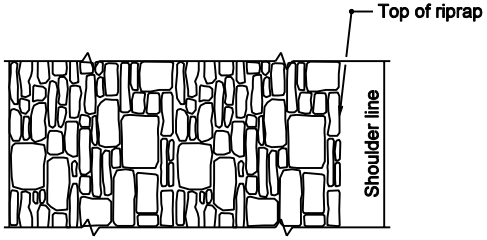


PLAN

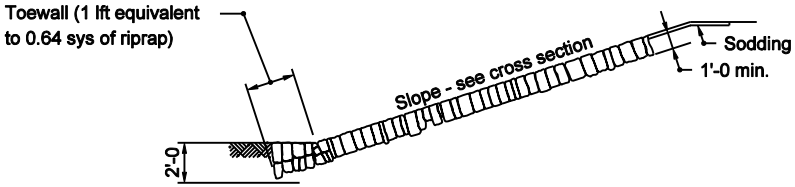


SECTION THROUGH HAND-LAID RIPRAP

INDIANA DEPARTMENT OF TRANSPORTATION

CONCRETE AND RIPRAP SLOPEWALL DETAILS

SEPTEMBER 2003

STANDARD DRAWING NO. E 616-SWCO-04

RICHARD L. VANCLEAVE REGISTERED No. 9750 STATE OF INDIANA PROFESSIONAL ENGINEER

DESIGN STANDARDS ENGINEER

/s/ Richard L. VanCleave 9-02-03
DESIGN STANDARDS ENGINEER DATE

/s/ Richard K. Smutzer 9-02-03
CHIEF HIGHWAY ENGINEER DATE