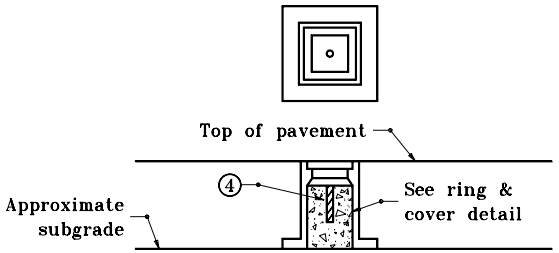

INSTALLATION FOR VITRIFIED BRICK OR BITUMINOUS SURFACE ON CONCRETE BASE (TYPE A)

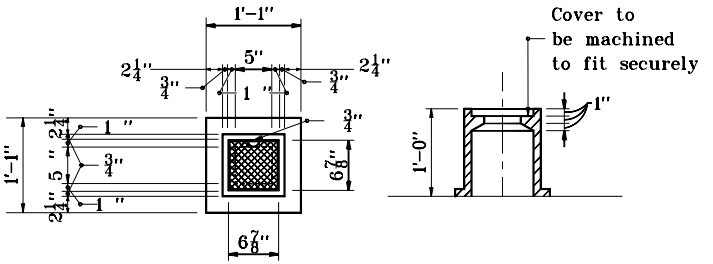

SURVEY LINE MONUMENT RING & COVER

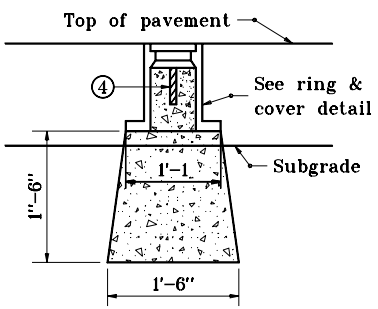

INSTALLATION FOR FLEXIBLE PAVEMENT (TYPE B)

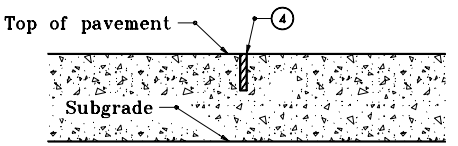

INSTALLATION FOR CONCRETE PAVEMENT (TYPE D)

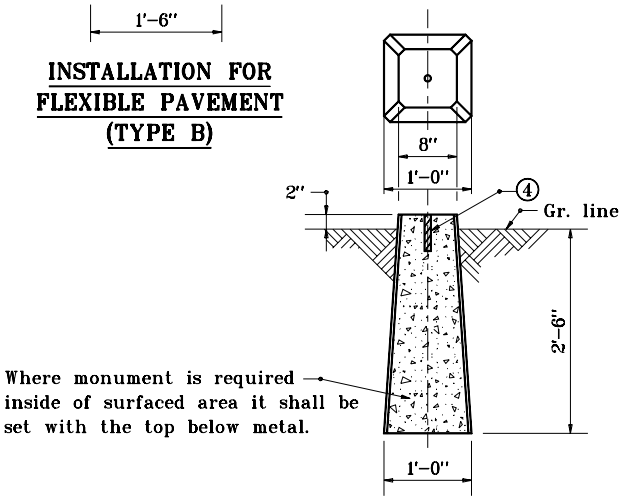

INSTALLATION OUTSIDE OF PAVEMENT (TYPE C)

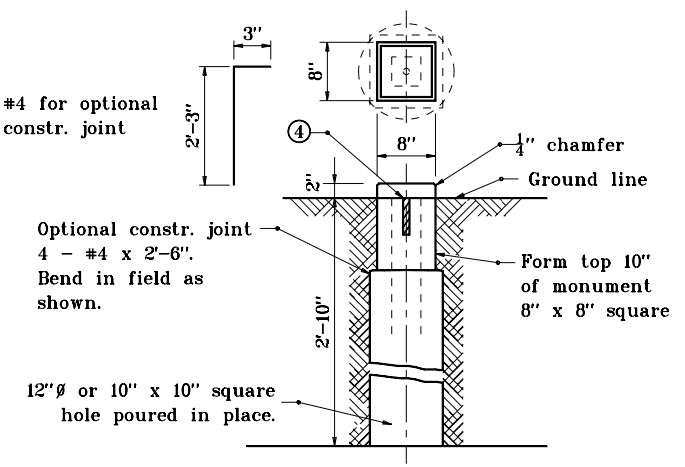

OPTIONAL INSTALLATION FOR TYPE C MONUMENT

GENERAL NOTES

1. Sign shall be white background with black copy.
2. One steel type A or 4" x 4" wood post required.
3. Letter height shall be as follows:
   Border: ½" series D
   Line 1: 1" series B
   Line 2: 1" series B
   Line 3: 1" series B
4. 1"Ø x 5" steel rod

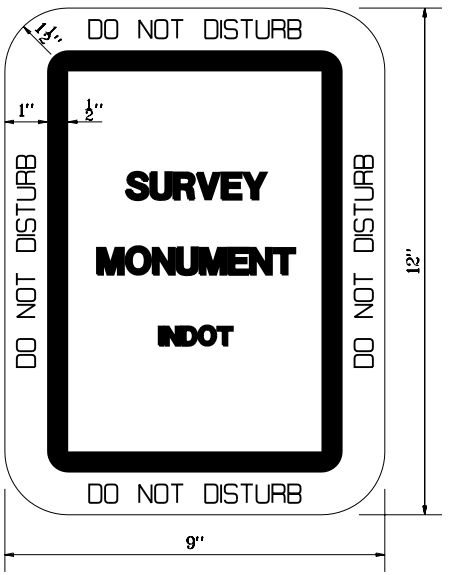

INDIANA DEPARTMENT OF TRANSPORTATION

SURVEY LINE MONUMENTS

SEPTEMBER 1997

STANDARD DRAWING NO. **E 615-SLMN-01**

ANTHONY L. UREMOVICH REGISTERED No. 18095 STATE OF INDIANA PROFESSIONAL ENGINEER

DESIGN STANDARDS ENGINEER

DETAILS PLACED IN THIS FORMAT 11-15-99

/s/ Anthony L. Uremovich 11-15-99
DESIGN STANDARDS ENGINEER DATE

/s/ Firooz Zandi 11-15-99
CHIEF HIGHWAY ENGINEER DATE

ORIGINALLY APPROVED 9-01-97