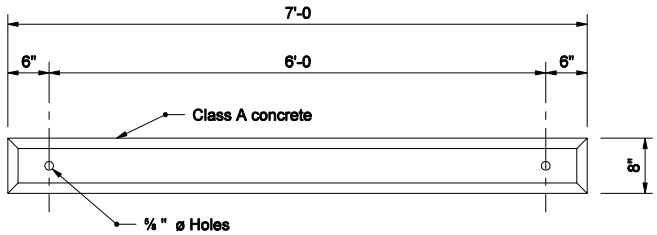

TOP VIEW

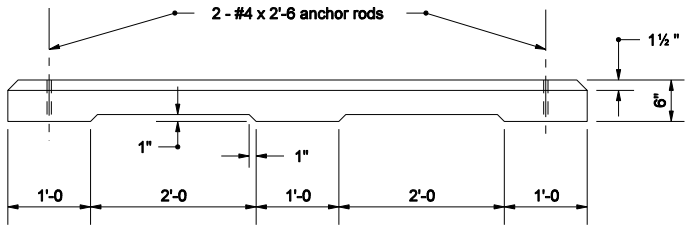

SIDE VIEW

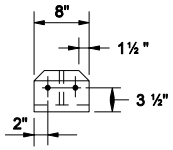

END VIEW

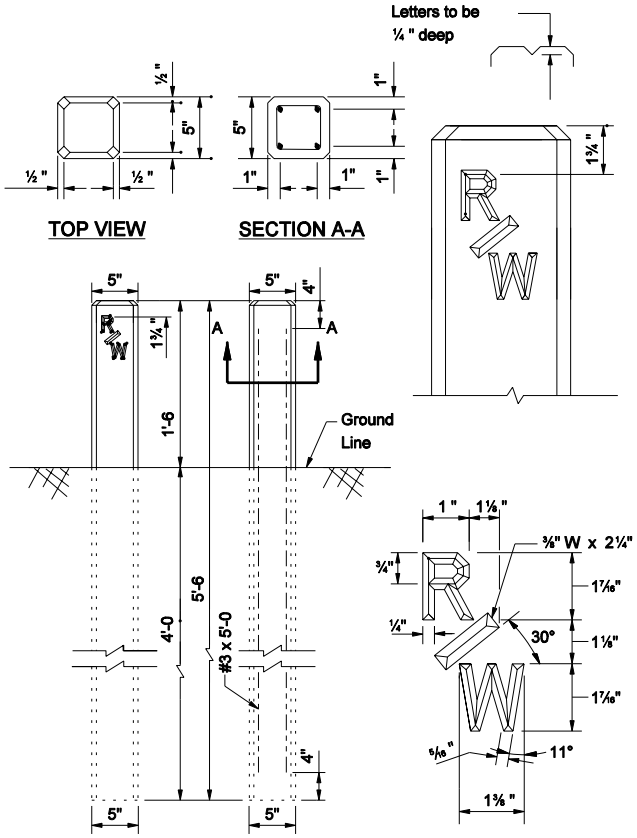

TOP VIEW

SECTION A-A

ELEVATION

INDIANA DEPARTMENT OF TRANSPORTATION

RIGHT-OF-WAY MARKER AND CONCRETE PARKING BARRIER

MARCH 2004

STANDARD DRAWING NO. E 615-RWPB-01

RICHARD L. VanCLEAVE REGISTERED No. 9750 STATE OF INDIANA PROFESSIONAL ENGINEER

DESIGN STANDARDS ENGINEER

/s/ Richard L. VanCleave X-OX-OX
DESIGN STANDARDS ENGINEER DATE

/s/ Richard K. Smutzer X-OX-OX
CHIEF HIGHWAY ENGINEER DATE