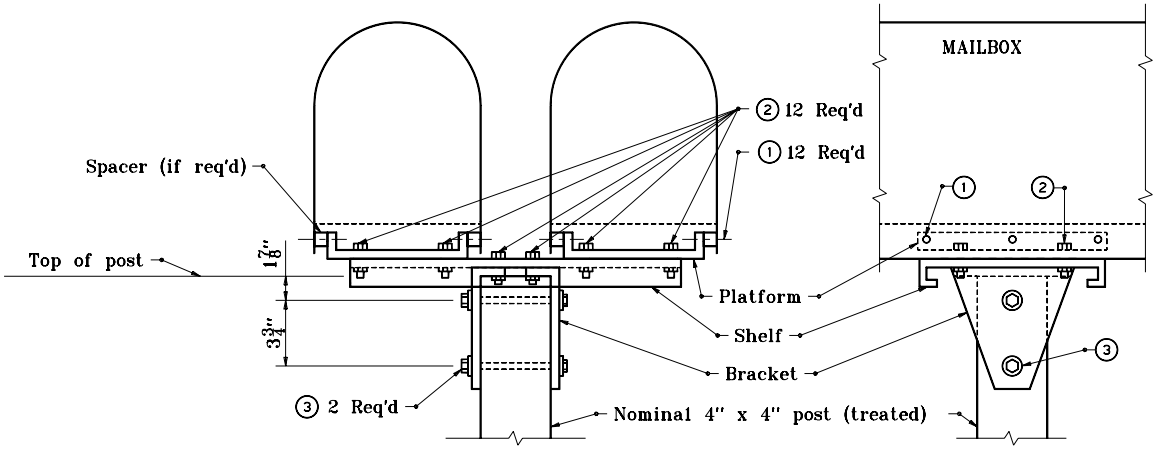

WITH WOOD POST

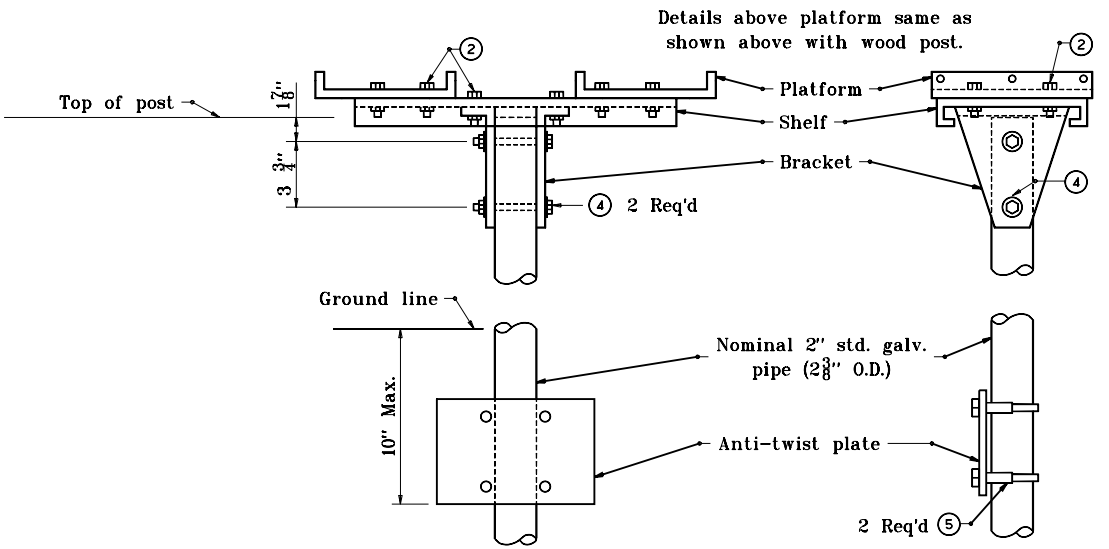

WITH PIPE POST

LEGEND

① #8-32 x "L" truss head machine screw with two 1/4" flat washers, 1/4" lock washer, and 1/4" hex nut.

② 3/8"-16 x 3/4" hex cap screw with two 3/8" flat washers 3/8" lock washers, and 3/8" hex nut.

③ 3/8"-16 x 4 1/2" hex cap screw with two 3/8" flat washers 3/8" lock washers. and 3/8" hex nut.

④ 3/8"-16 x 3" hex cap screw with two 3/8" flat washers, 3/8" lock washers, 3/8" lock washer, and 3/8" hex nut.

⑤ Nominal 2 3/8" muffler clamp

INDIANA DEPARTMENT OF TRANSPORTATION

DOUBLE MAILBOX ASSEMBLY

APRIL 1995

STANDARD DRAWING NO. **E 611-MBAS-02**

ANTHONY L. UREMOVICH REGISTERED No. 18095 STATE OF INDIANA PROFESSIONAL ENGINEER

DESIGN STANDARDS ENGINEER

DETAILS PLACED IN THIS FORMAT 11-15-99

/s/ Anthony L. Uremovich 11-15-99
DESIGN STANDARDS ENGINEER DATE

/s/ Firooz Zandi 11-15-99
CHIEF HIGHWAY ENGINEER DATE

ORIGINALLY APPROVED 4-03-95