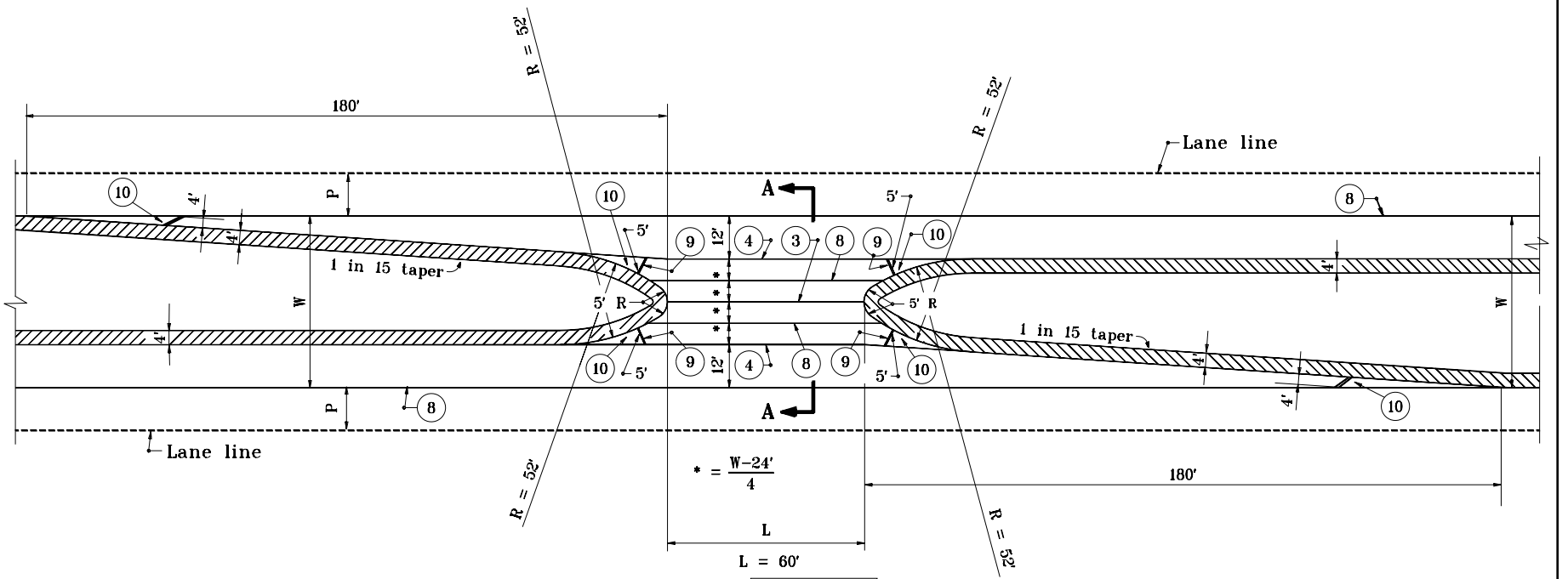

L = 60'

Type T $40' \leq W < 45'$

L = 56'

Type U $45' \leq W \leq 65'$

PLAN

NOTES :

1. See Standard Drawing E 610-PRCO-01 for Legend and Section A-A .

INDIANA DEPARTMENT OF TRANSPORTATION	
PUBLIC ROAD CROSSOVERS TYPE T & U MAY 2000	
STANDARD DRAWING NO. **E 610-PRCO-06**	
ANTHONY L. UREMOVICH REGISTERED No. 18095 STATE OF INDIANA PROFESSIONAL ENGINEER — DESIGN STANDARDS ENGINEER	/s/ Anthony L. Uremovich — DESIGN STANDARDS ENGINEER — 5-01-00 DATE /s/ Firooz Zandi — CHIEF HIGHWAY ENGINEER — 5-01-00 DATE