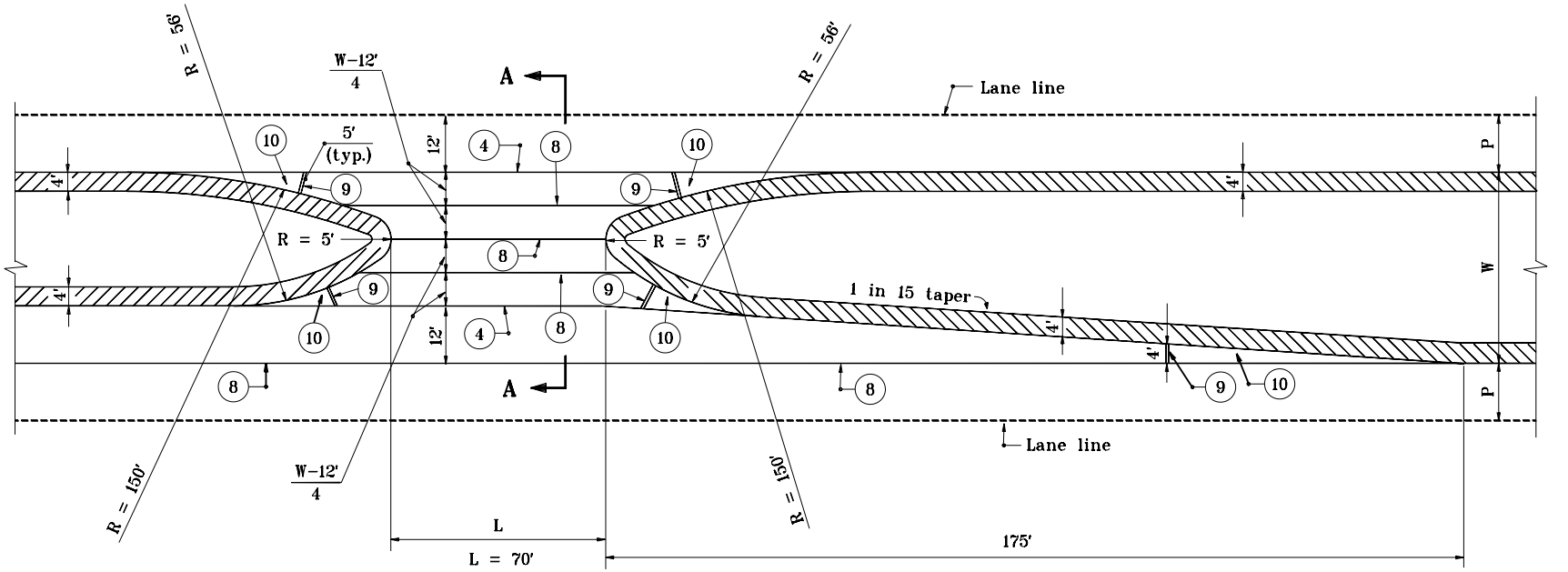

L = 70'

Type P $30' \leq W < 35'$

L = 66'

Type R $35' \leq W < 45'$

PLAN

NOTES :

1. See Standard Drawing E 610-PRCO-01 for Legend and Section A-A.

INDIANA DEPARTMENT OF TRANSPORTATION

PUBLIC ROAD CROSSOVERS TYPE P & R

MAY 2000

STANDARD DRAWING NO. **E 610-PRCO-04**

ANTHONY L. UREMOVICH REGISTERED No. 18095 STATE OF INDIANA PROFESSIONAL ENGINEER

DESIGN STANDARDS ENGINEER

/s/ Anthony L. Uremovich 5-01-00
DESIGN STANDARDS ENGINEER DATE

/s/ Firooz Zandi 5-01-00
CHIEF HIGHWAY ENGINEER DATE