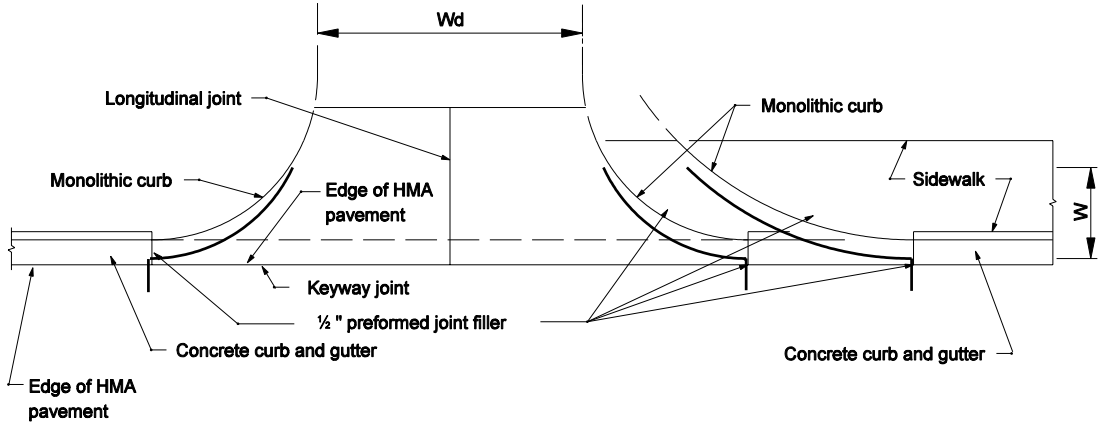

CONCRETE CURB & GUTTER CONNECTION FOR CLASS I & III DRIVES

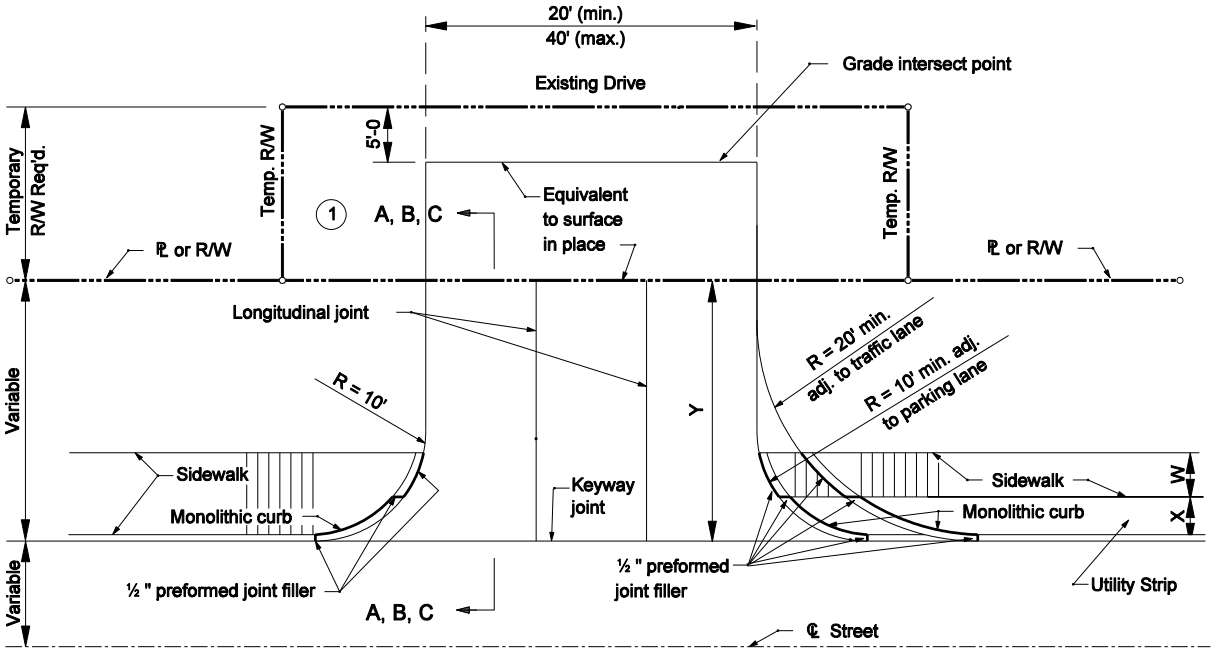

PLAN VIEW - CLASS III DRIVE

NOTES :

1. See Standard Drawing E 610-DRIV-01 for Section A-A. See Standard Drawing E 610-DRIV-02 for Section B-B. See Standard Drawing E 610-DRIV-03 for Section C-C.
2. For Class III drive, PCCP pavement for driveways shall be placed over 6 in. of compacted aggregate for base type O.
3. See Standard Drawing E 610-DRIV-16 for keyway joint detail.
4. See Standard Drawing E 610-DRIV-07 for General Notes.
5. See Standard Drawings E 804-SWCR-02 and E 804-SWCR-09 for side walk curb ramp details.

LEGEND

W = Width of sidewalk

Wd = Driveway width

X = Distance between back face of curb and sidewalk

Y = Distance from front face of curb to ℄ or R/W

Curb ramp

INDIANA DEPARTMENT OF TRANSPORTATION

CLASS III DRIVE

MARCH 2004

STANDARD DRAWING NO. E 610-DRIV-08

RICHARD L. VanCLEAVE REGISTERED No. 9750 STATE OF INDIANA PROFESSIONAL ENGINEER

DESIGN STANDARDS ENGINEER

/s/ Richard L. VanCleave 1-03-00
DESIGN STANDARDS ENGINEER DATE

/s/ Richard K. Smutzer 1-03-00
CHIEF HIGHWAY ENGINEER DATE