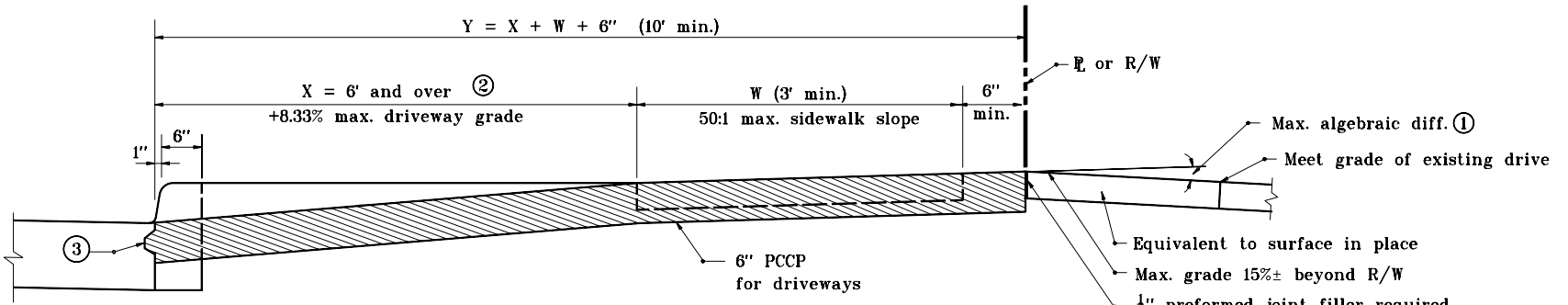

SECTION C–C

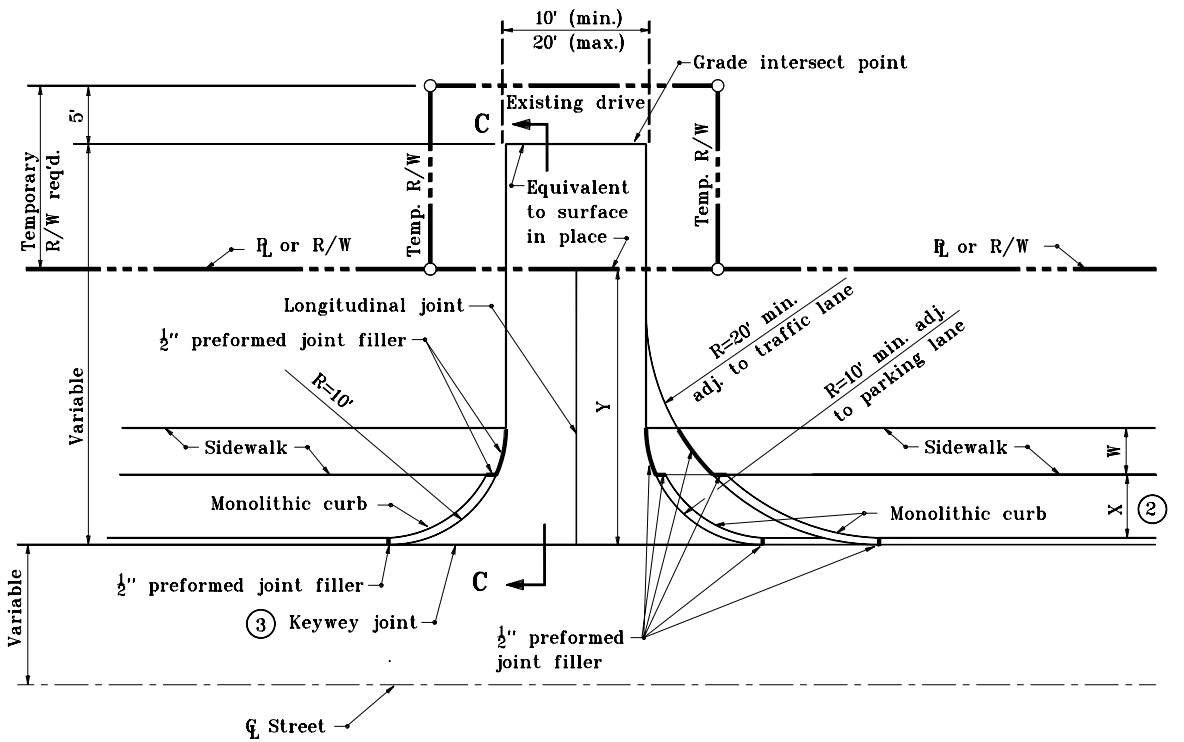

PLAN VIEW

X = 6' AND OVER FROM FACE OF CURB

NOTES :

① The maximum algebraic difference in grades shall not exceed 8% for crest vertical curves, nor 12% for sag vertical curves.

② The limits for X are based on a 6" curb height. For other curb heights, the limits for X shall be adjusted.

③ See Standard Drawing E 610–DRIV–16 for keyway construction joint details.

LEGEND

W = Width of sidewalk

X = Distance between back face of curb and sidewalk

Y = Distance from front face of curb to ℄ or R/W

INDIANA DEPARTMENT OF TRANSPORTATION

CLASS I DRIVE

SIDEWALK NOT ADJACENT TO CURB

JANUARY 2000

STANDARD DRAWING NO. **E 610–DRIV–03**

ANTHONY L. UREMOVICH REGISTERED No. 18095 STATE OF INDIANA PROFESSIONAL ENGINEER

DESIGN STANDARDS ENGINEER

/s/ Anthony L. Uremovich — DESIGN STANDARDS ENGINEER — 1–03–00 DATE

/s/ Firooz Zandi — CHIEF HIGHWAY ENGINEER — 1–03–00 DATE