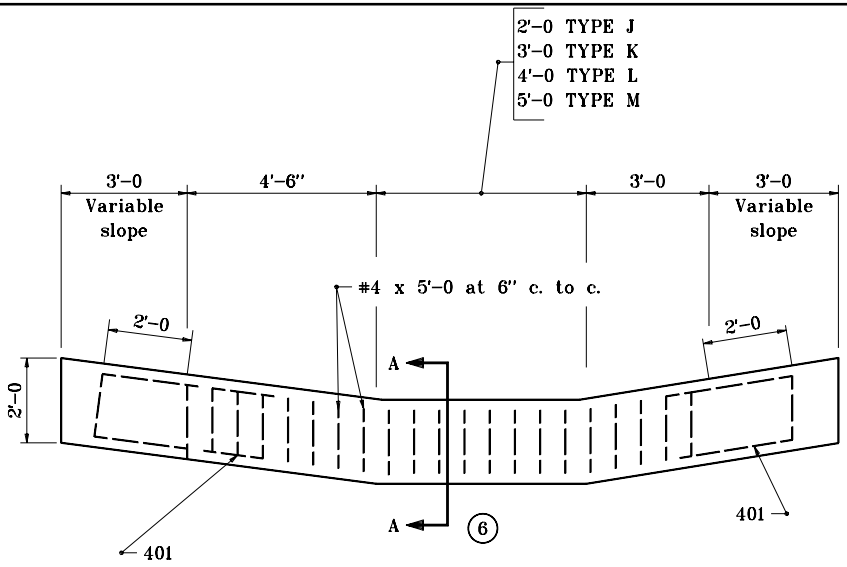

ELEVATION VIEW
CUT-OFF WALL FOR PAVED SIDE DITCH TYPES J THROUGH M

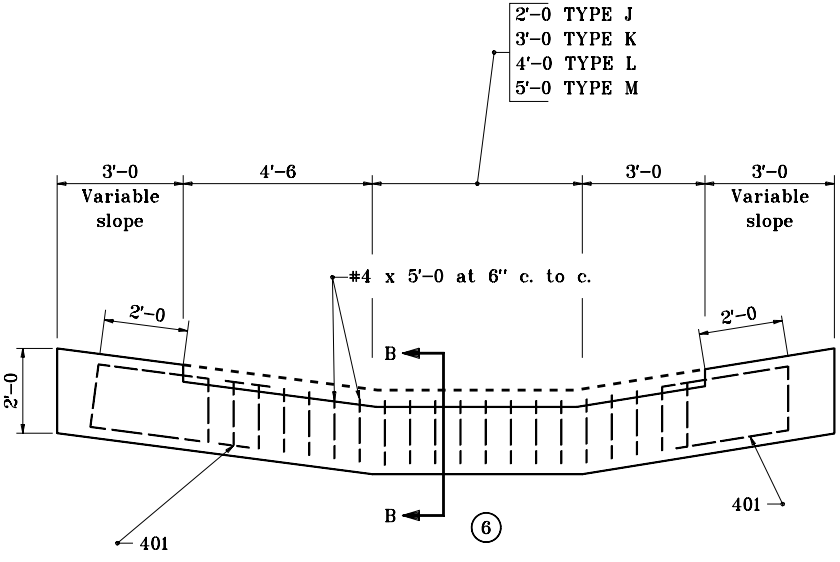

ELEVATION VIEW
LUG FOR PAVED SIDE DITCH TYPES J THROUGH M

GENERAL NOTES

1. The 6:1 sloped side shall be placed nearest the roadway.

2. Cutt-off walls shall be used at the begining and end of all paved side ditch.

3. Lugs shall be used at the following locations:

   a. 10 ft downslope from a grade change.
   b. 10 ft downslope from the intersection of different types of paved side ditch.
   c. At the downslope end of a transition between different types of paved side ditch.
   d. At the intervals as follows:

Interval	Grade
200 ft	3% to 5%
150 ft	5% to 8%
100 ft	8% to 10%
50 ft	10% & above

4. Paved side ditch transitions shall be required at intersections with earth ditches and pipe culverts. These transitions shall be converted to equivalent lengths of the type of paved side ditch specified at these locations.

5. Transitions of 10 ft or less shall be required between two different types of paved side ditch. Such transitions shall be converted to equivalent lengths of the larger type of paved side ditch specified at these locations.

6. See Standard Drawing E 607-PSDT-04 for Sections A-A and B-B.

7. See Standard Drawing E 607-PSDT-03 for 401 bending diagram.

INDIANA DEPARTMENT OF TRANSPORTATION

P.S.D. CUT-OFF WALL & LUG AND GENERAL NOTES

JANUARY 2000

STANDARD DRAWING NO. **E 607-PSDT-05**

ANTHONY L. UREMOVICH REGISTERED No. 18095 STATE OF INDIANA PROFESSIONAL ENGINEER

DESIGN STANDARDS ENGINEER

/s/ Anthony L. Uremovich 1-03-00
DESIGN STANDARDS ENGINEER DATE

/s/ Firooz Zandi 1-03-00
CHIEF HIGHWAY ENGINEER DATE