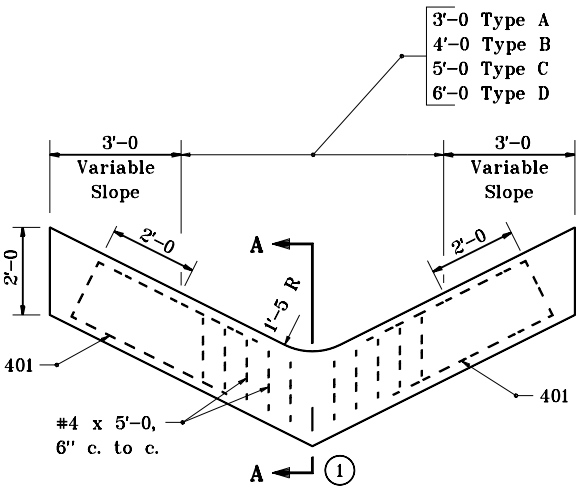

ELEVATION VIEW

CUT-OFF WALL FOR PAVED SIDE DITCH TYPES A THROUGH D

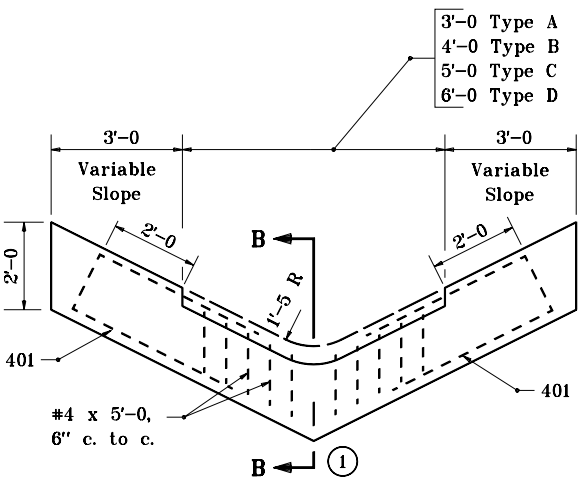

ELEVATION VIEW

LUG FOR PAVED SIDE DITCH TYPES A THROUGH D

GENERAL NOTES

1. See Standard Drawing E 607-PSDT-02 for Sections A-A and B-B.
2. See Standard Drawing E 607-PSDT-03 for 401 bending diagram.

INDIANA DEPARTMENT OF TRANSPORTATION

PAVED SIDE DITCH
CUT-OFF WALL AND LUG

SEPTEMBER 1997

STANDARD DRAWING NO. **E 607-PSDT-04**

ANTHONY L. UREMOVICH REGISTERED No. 18095 STATE OF INDIANA PROFESSIONAL ENGINEER

DESIGN STANDARDS ENGINEER

DETAILS PLACED IN THIS FORMAT 11-15-99

/s/ Anthony L. Uremovich 11-15-99
DESIGN STANDARDS ENGINEER DATE

/s/ Firooz Zandi 11-15-99
CHIEF HIGHWAY ENGINEER DATE

ORIGINALLY APPROVED 9-01-97