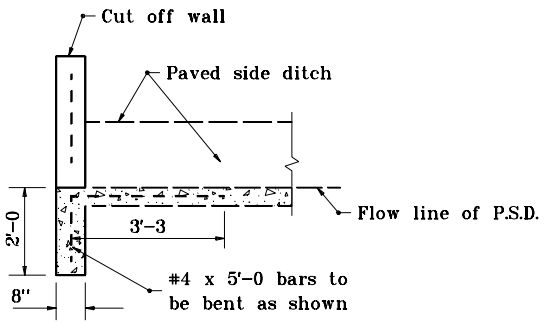


**SECTION A-A**

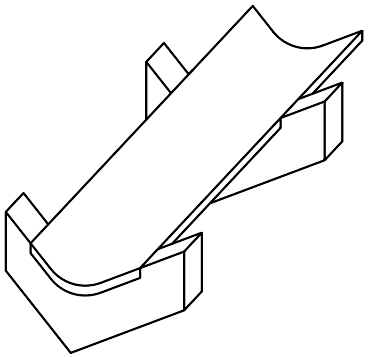

ISOMETRIC VIEW

**PAVED SIDE DITCH TYPE A THROUGH D**

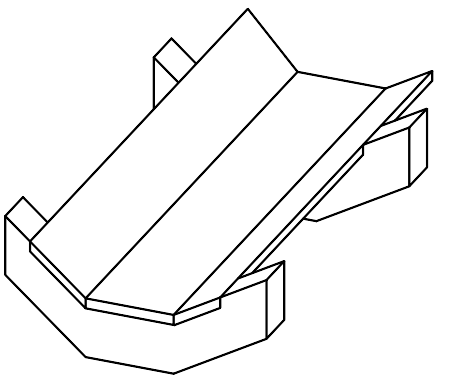

ISOMETRIC VIEW

**PAVED SIDE DITCH TYPES J THROUGH M**

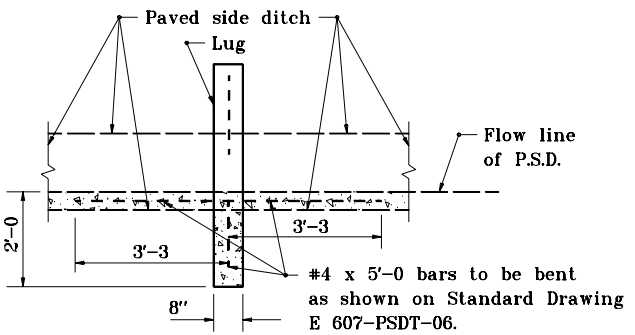


**SECTION B-B**

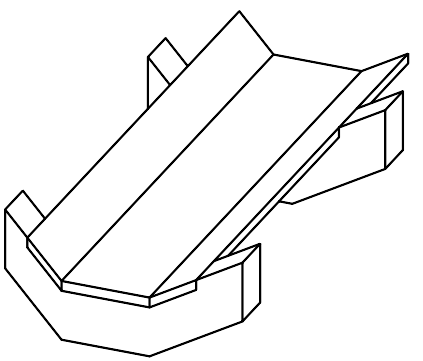

ISOMETRIC VIEW

**PAVED SIDE DITCH TYPE E THROUGH H**

INDIANA DEPARTMENT OF TRANSPORTATION

**PAVED SIDE DITCH**
**SECTIONS AND ISOMETRICS**

SEPTEMBER 1997

STANDARD DRAWING NO. **E 607-PSDT-02**

ANTHONY L. UREMOVICH REGISTERED No. 18095 STATE OF INDIANA PROFESSIONAL ENGINEER

DESIGN STANDARDS ENGINEER

| | |
|---|---|
| DETAILS PLACED IN THIS FORMAT | 11-15-99 |
| /s/ Anthony L. Uremovich<br>DESIGN STANDARDS ENGINEER | 11-15-99<br>DATE |
| /s/ Firooz Zandi<br>CHIEF HIGHWAY ENGINEER | 11-15-99<br>DATE |
| ORIGINALLY APPROVED | 9-01-97 |