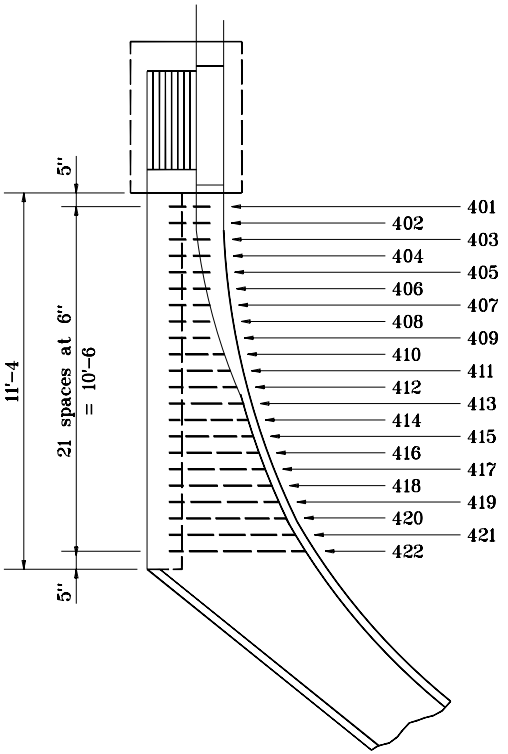

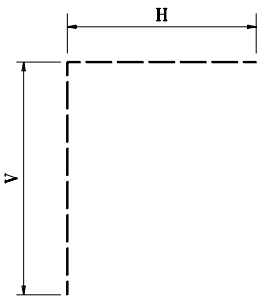

#4 BAR

REINFORCING PLAN CONCRETE GUTTER TURNOUT

MK	QTY.	SIZE	BAR LENGTHS		
			V	H	TOTAL
401	1	#4	2'-0	1'-3	3'-3
402				1'-4	3'-4
403				1'-5	3'-5
404				1'-6	3'-6
405				1'-7	3'-7
406				1'-8	3'-8
407				1'-9	3'-9
408				1'-10	3'-10
409				1'-11	3'-11
410				2'-0	4'-0
411				2'-2	4'-2
412				2'-4	4'-4
413				2'-6	4'-6
414				2'-8	4'-8
415				2'-10	4'-10
416				3'-0	5'-0
417				3'-4	5'-4
418				3'-6	5'-8
419				3'-11	5'-11
420				4'-2	6'-2
421				4'-6	6'-6
422			2'-0	4'-10	6'-10
423	3	#4	1'-3	3'-0	4'-3

MK 423 bars to be threaded, galvanized, and installed as shown in Detail B on Standard Drawing E 605-GTRC-01.

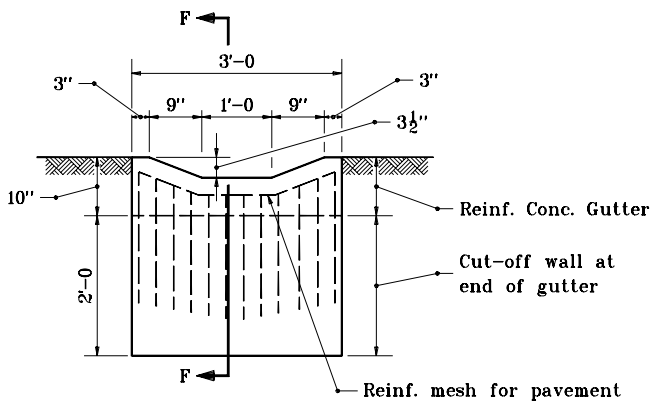

SECTION G-G

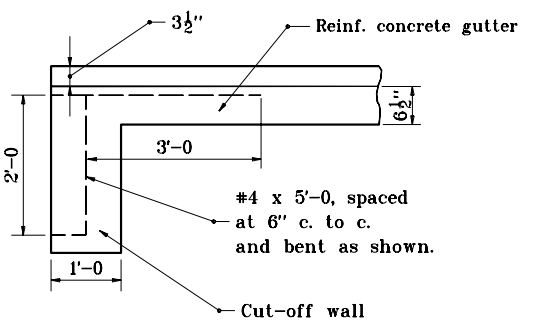

SECTION F-F

INDIANA DEPARTMENT OF TRANSPORTATION

REINFORCED CONCRETE GUTTER TURNOUT

SEPTEMBER 1997

STANDARD DRAWING NO. **E 605-GTRC-02**

ANTHONY L. UREMOVICH REGISTERED No. 18095 STATE OF INDIANA PROFESSIONAL ENGINEER

DESIGN STANDARDS ENGINEER

DETAILS PLACED IN THIS FORMAT	11-15-99
/s/ Anthony L. Uremovich DESIGN STANDARDS ENGINEER	11-15-99 DATE
/s/ Firooz Zandi CHIEF HIGHWAY ENGINEER	11-15-99 DATE
ORIGINALLY APPROVED	9-01-97