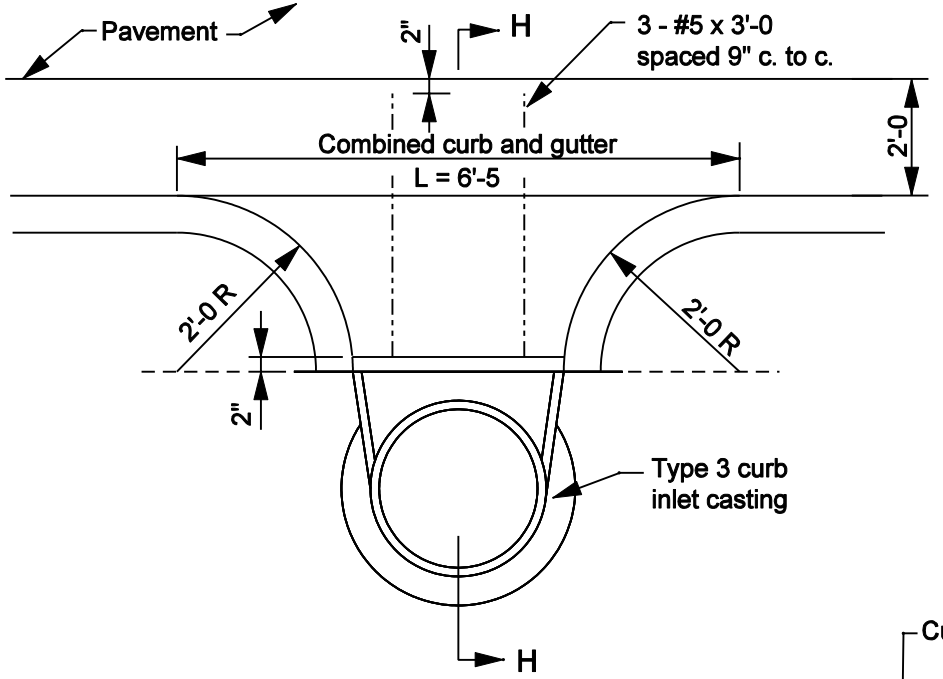


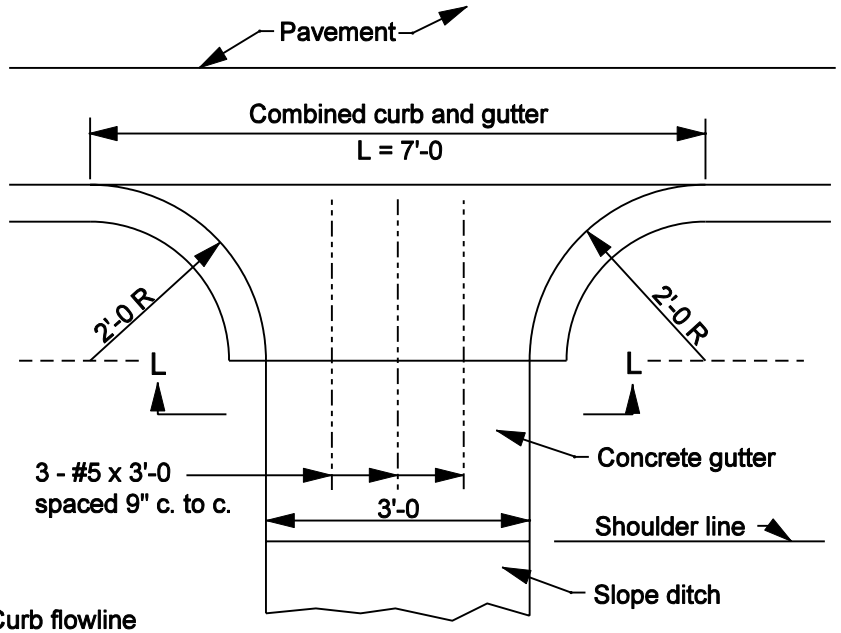


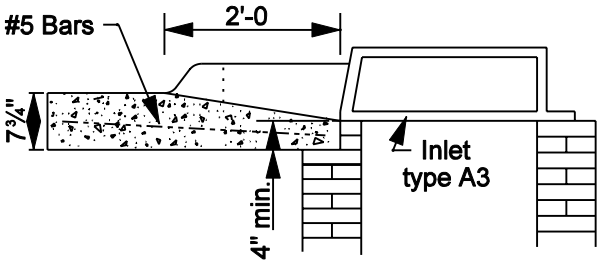


SECTION H-H

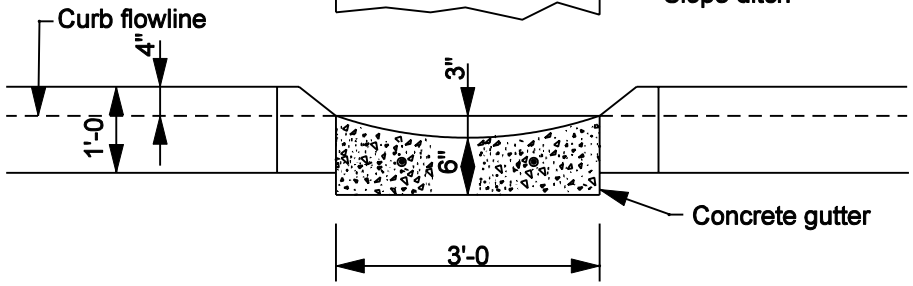


SECTION L-L

INDIANA DEPARTMENT OF TRANSPORTATION

**COMBINED CURB AND GUTTER TURNOUTS**

MARCH 2003

STANDARD DRAWING NO. E 605-CTCG-01

RICHARD L. VanCLEAVE REGISTERED No. 9750 STATE OF INDIANA PROFESSIONAL ENGINEER

DESIGN STANDARDS ENGINEER

/s/ Richard L. VanCleave 3-03-03
DESIGN STANDARDS ENGINEER DATE

/s/ Richard K. Smutzer 3-03-03
CHIEF HIGHWAY ENGINEER DATE