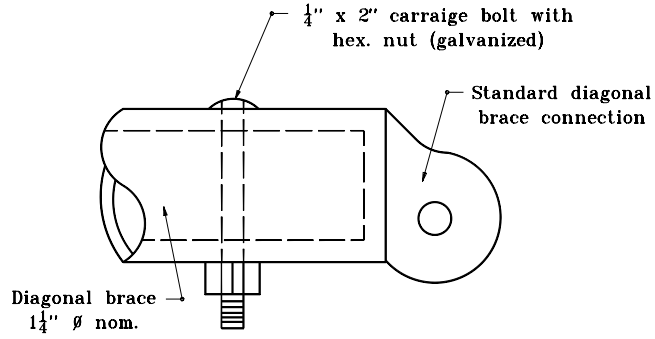

STANDARD METHOD

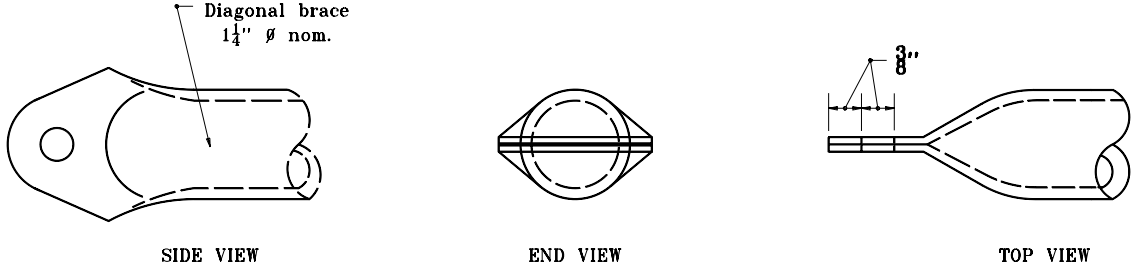

ALTERNATE METHOD

DIAGONAL BRACE CONNECTION

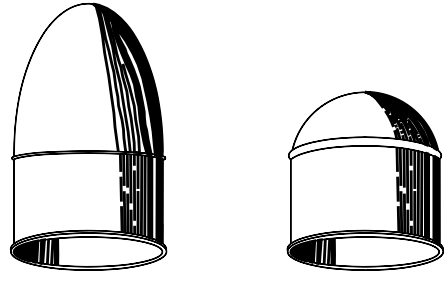

TYPICAL CAPS FOR TUBULAR POSTS

INDIANA DEPARTMENT OF TRANSPORTATION

BRACE CONNECTIONS AND POST CAPS

APRIL 1995

STANDARD DRAWING NO. **E 603-FFTF-04**

ANTHONY L. UREMOVICH REGISTERED No. 18095 STATE OF INDIANA PROFESSIONAL ENGINEER

DESIGN STANDARDS ENGINEER

DETAILS PLACED IN THIS FORMAT 7-27-99

/s/ Anthony L. Uremovich 7-27-99
DESIGN STANDARDS ENGINEER DATE

/s/ Firooz Zandi 7-27-99
CHIEF HIGHWAY ENGINEER DATE

ORIGINALLY APPROVED 4-03-95