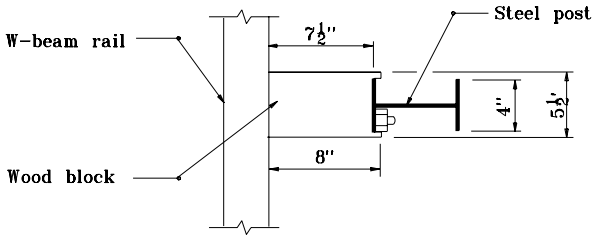

PLAN

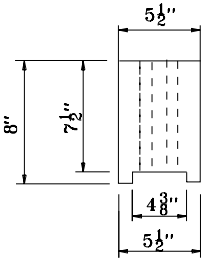

WOOD BLOCK

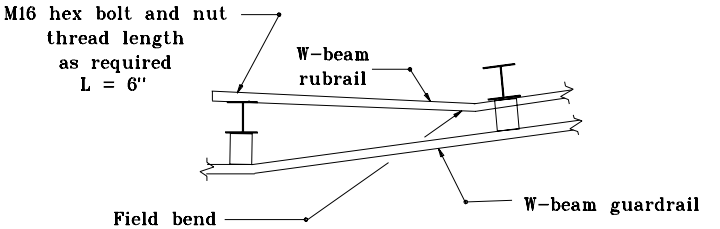

RUBRAIL TERMINATION DETAIL

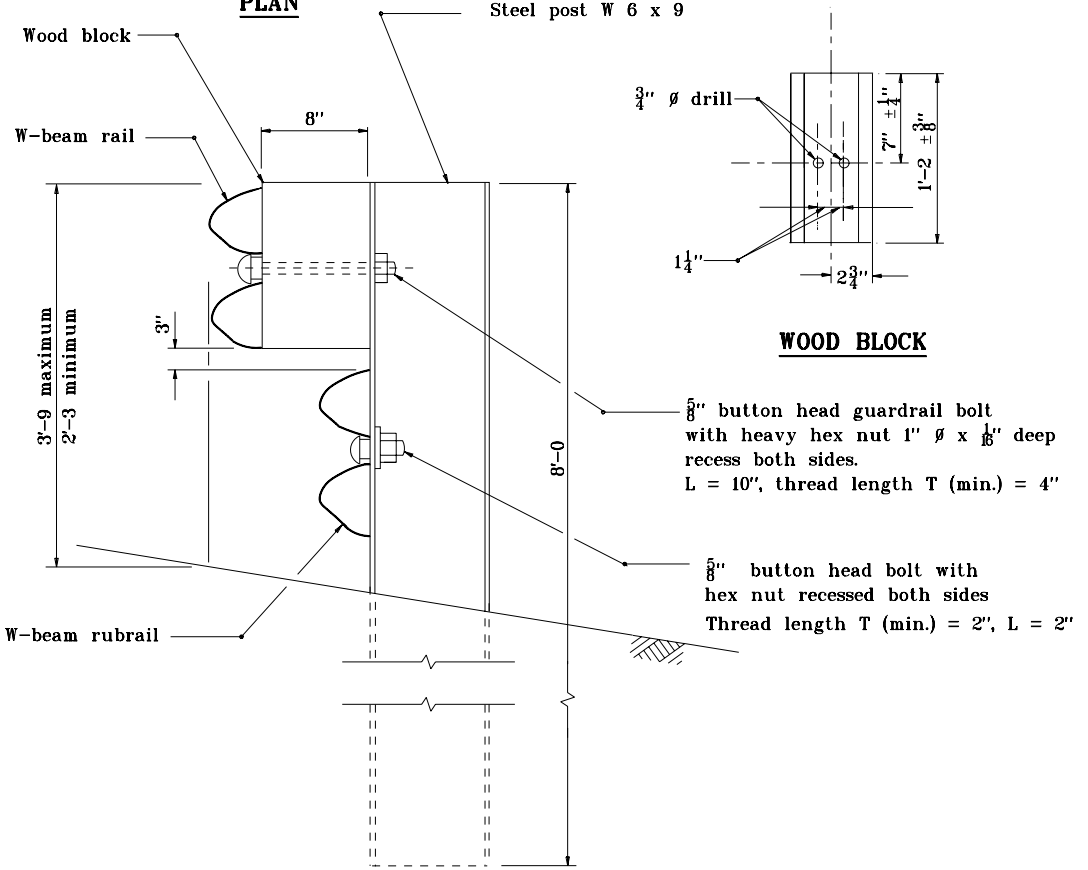

ELEVATION

STEEL POST AND WOOD BLOCK DETAIL FOR WR-BEAM GUARDRAIL

NOTES:

1. All posts shall be 8'-0 long and spaced at 6'-3.

INDIANA DEPARTMENT OF TRANSPORTATION

WR-BEAM GUARDRAIL

SEPTEMBER 2000

STANDARD DRAWING NO. **E 601-WBGA-06**

ANTHONY L. UREMOVICH REGISTERED No. 18095 STATE OF INDIANA PROFESSIONAL ENGINEER

DESIGN STANDARDS ENGINEER

/s/ Anthony L. Uremovich 9-01-00
DESIGN STANDARDS ENGINEER DATE

/s/ Firooz Zandi 9-01-00
CHIEF HIGHWAY ENGINEER DATE