GENERAL NOTES

1. This sheet shall be used in conjunction with Standard Drawings E 601-CWGS-01 through -04 when a curved W-beam guardrail system is specified.

2. The TS $2\frac{1}{2}$ x $2\frac{1}{2}$ structural tube shall only be welded to post B.

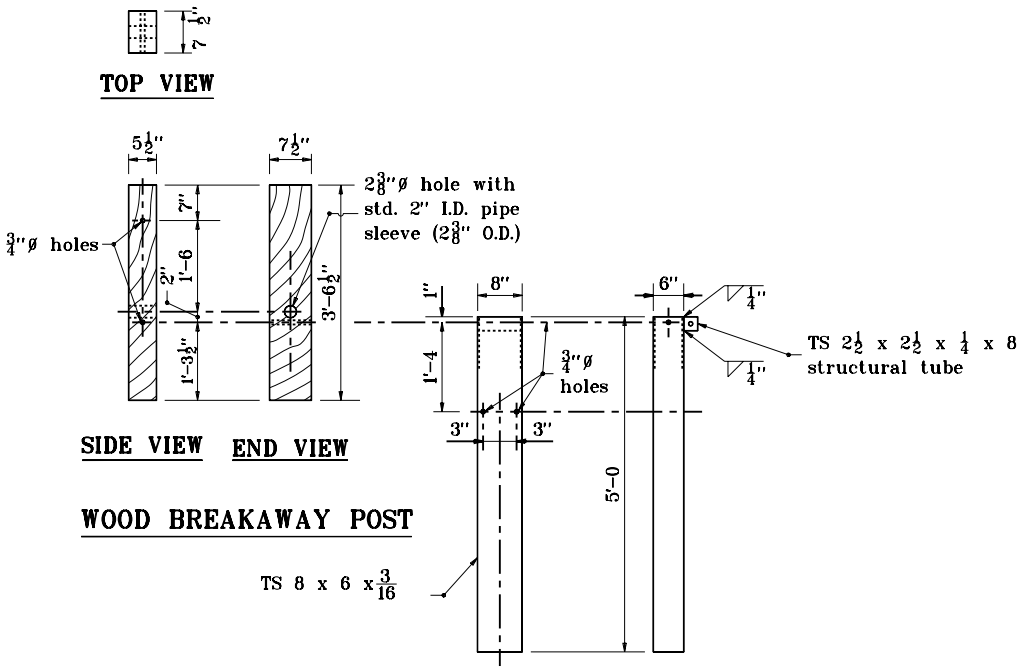

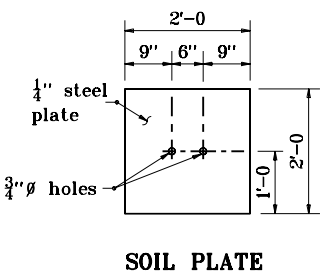

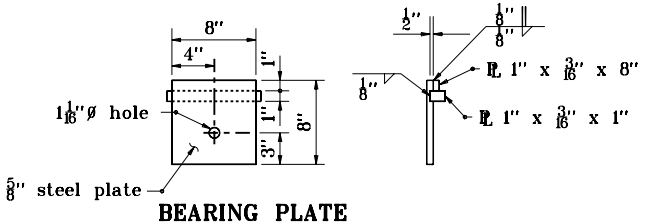

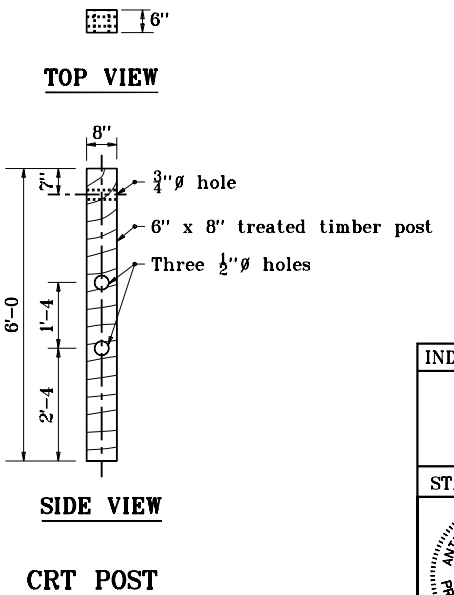

INDIANA DEPARTMENT OF TRANSPORTATION

CURVED W-BEAM GUARDRAIL SYSTEM

APRIL 1995

STANDARD DRAWING NO. **E 601-CWGS-06**

ANTHONY L. UREMOVICH REGISTERED No. 18095 STATE OF INDIANA PROFESSIONAL ENGINEER

DESIGN STANDARDS ENGINEER

DETAILS PLACED IN THIS FORMAT	11-15-99
/s/ Anthony L. Uremovich DESIGN STANDARDS ENGINEER	11-15-99 DATE
/s/ Firooz Zandi CHIEF HIGHWAY ENGINEER	11-15-99 DATE
ORIGINALLY APPROVED	4-03-95