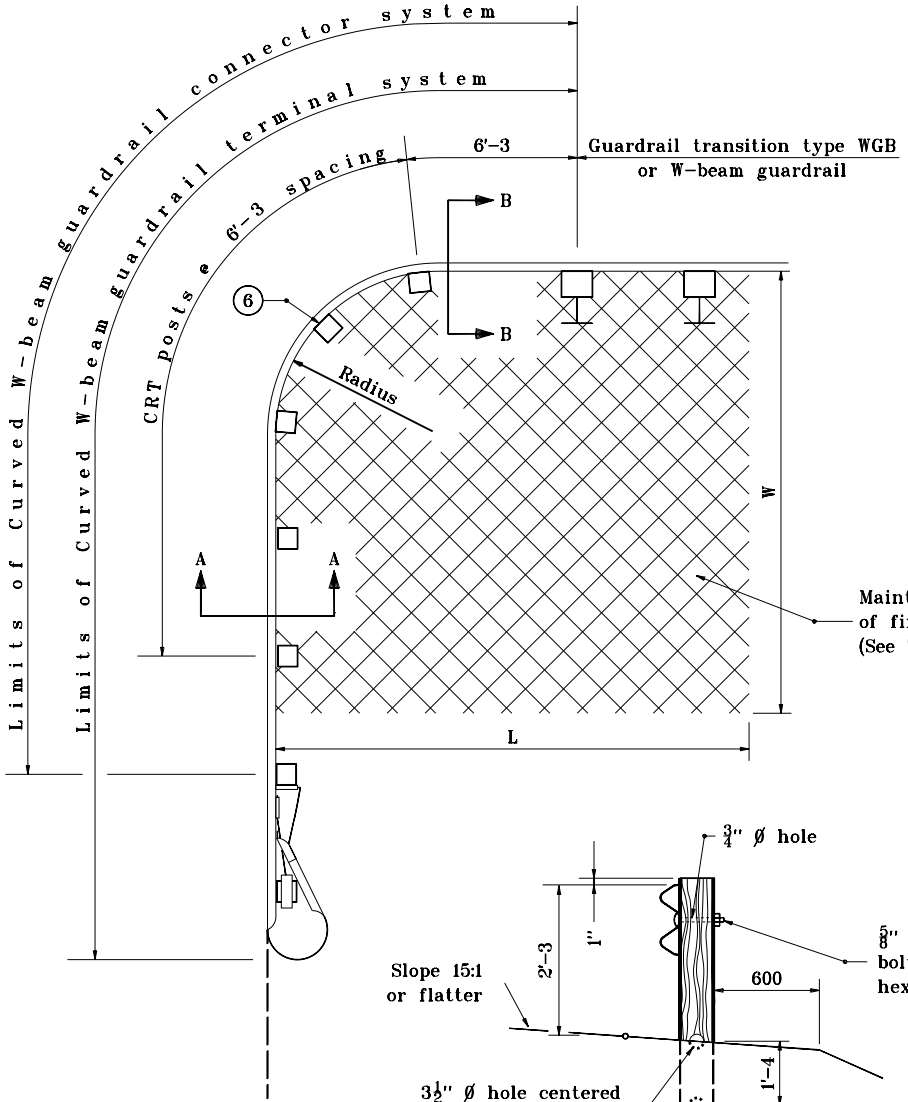

TABLE CWGS-2		
RADIUS	NO. OF CRT POSTS	REQUIRED AREA FREE OF FIXED OBJECTS L x W
8'-6	5	25' x 15'
17'	6	30' x 15'
25'-6	8	40' x 20'
35'	11	50' x 20'

See Standard Drawing E 601-CWGS-03 for General Notes.

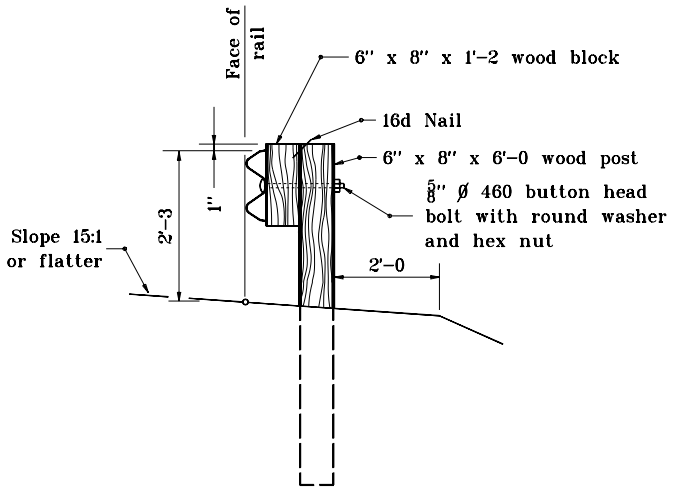

SECTION B-B

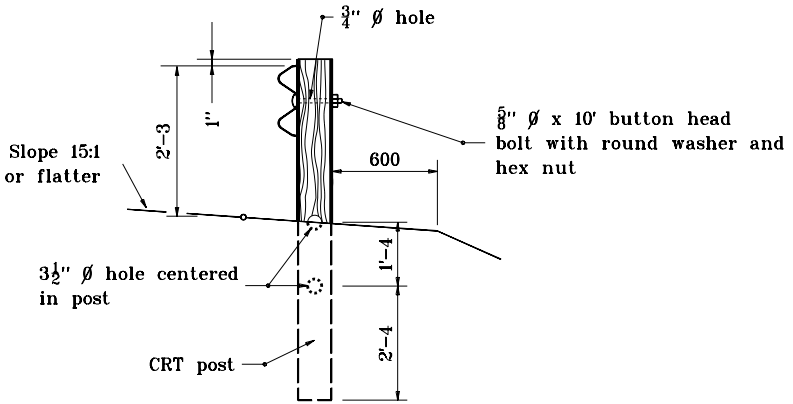

SECTION A-A

INDIANA DEPARTMENT OF TRANSPORTATION

CURVED W-BEAM GUARDRAIL SYSTEM

JANUARY 2000

STANDARD DRAWING NO. **E 601-CWGS-02**

ANTHONY L. UREMOVICH REGISTERED No. 18095 STATE OF INDIANA PROFESSIONAL ENGINEER

DESIGN STANDARDS ENGINEER

/s/ Anthony L. Uremovich 1-03-00
DESIGN STANDARDS ENGINEER DATE

/s/ Firooz Zandi 1-03-00
CHIEF HIGHWAY ENGINEER DATE