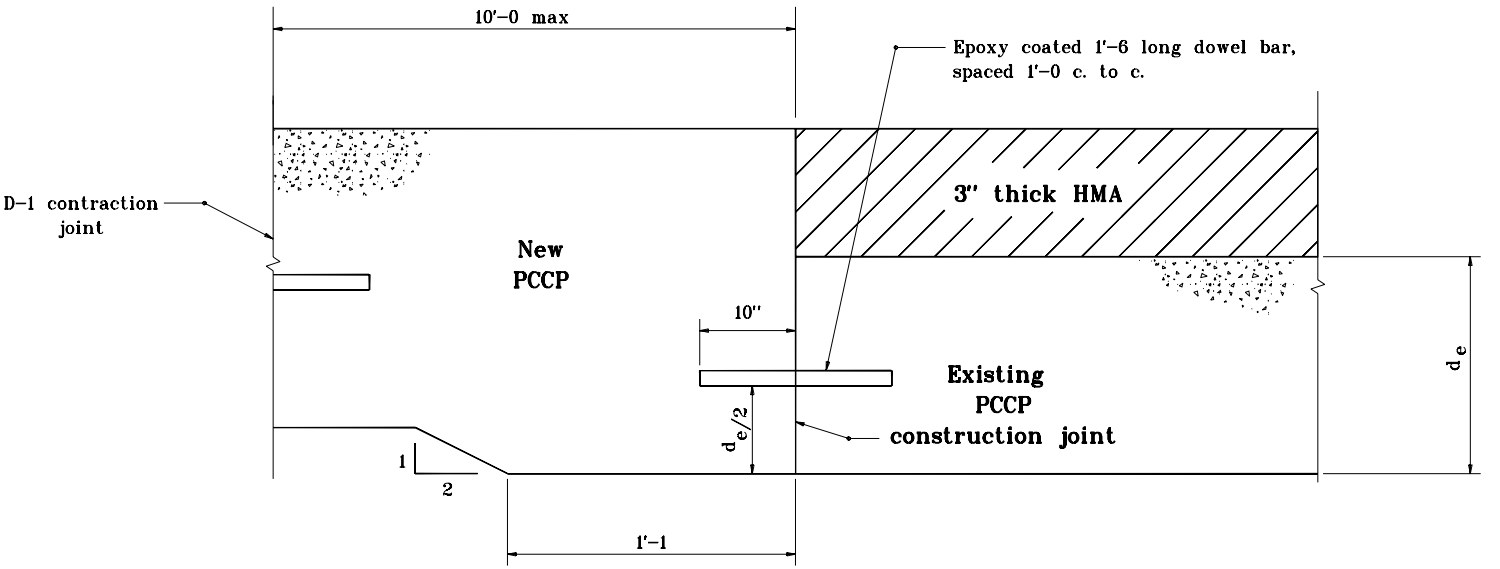

TRANSITION DESIGN WITH THICKENED SLAB

New PCCP Thickness is Less Than
that of 3" Thick HMA + Existing PCCP

INDIANA DEPARTMENT OF TRANSPORTATION

PAVEMENT TYPE TRANSITION

JANUARY 2000

STANDARD DRAWING NO. **E 500-PTRN-02**

ANTHONY L. UREMOVICH REGISTERED No. 18095 STATE OF INDIANA PROFESSIONAL ENGINEER

DESIGN STANDARDS ENGINEER

/s/ Anthony L. Uremovich — DESIGN STANDARDS ENGINEER — 1-03-00 DATE

/s/ Firooz Zandi — CHIEF HIGHWAY ENGINEER — 1-03-00 DATE