GENERAL NOTES

1. Ear construction type A:
   2 lines of #5 bars required (Est. wt. = 86 lb). Transverse sawed and sealed joint, in line with pavement contraction joint, shall extend through ear construction. The #5 bars shall be discontinued at such joints. See Detail B–B on Standard Drawing E 401–REBS–01.

2. See Standard Drawing E 401–REBS–03 for Section A–A.

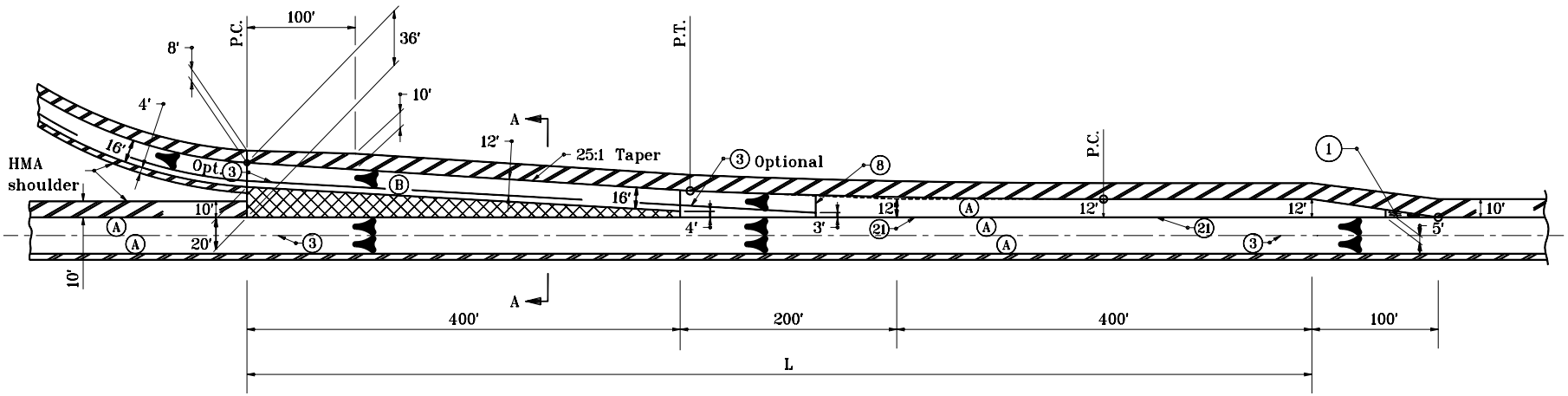

EXIT

CURVE DATA

△ = 2° 17′ 26″
T = 190.91′
L = 381.76′
E = 1.91′
R = 9549.30′

LEGEND

- (A) Pavement type and thickness as specified for the mainline.
- (B) Pavement type and thickness as specified for ramps.
- (3) Longitudinal Joint (Optional where indicated)
- (21) Longitudinal Construction Joint
- HMA Shoulder (Thickness of mainline pavement)
- HMA Shoulder (Thickness as specified on Typical Sections)

INDIANA DEPARTMENT OF TRANSPORTATION

RAMP EXIT TERMINAL
HMA SHOULDER
JANUARY 1999

STANDARD DRAWING NO. **E 401–REBS–02**

ANTHONY L. UREMOVICH REGISTERED No. 18095 STATE OF INDIANA PROFESSIONAL ENGINEER

DESIGN STANDARDS ENGINEER

DETAILS PLACED IN THIS FORMAT 11-15-99

/s/ Anthony L. Uremovich 11-15-99
DESIGN STANDARDS ENGINEER DATE

/s/ Firooz Zandi 11-15-99
CHIEF HIGHWAY ENGINEER DATE

ORIGINALLY APPROVED 1-04-99