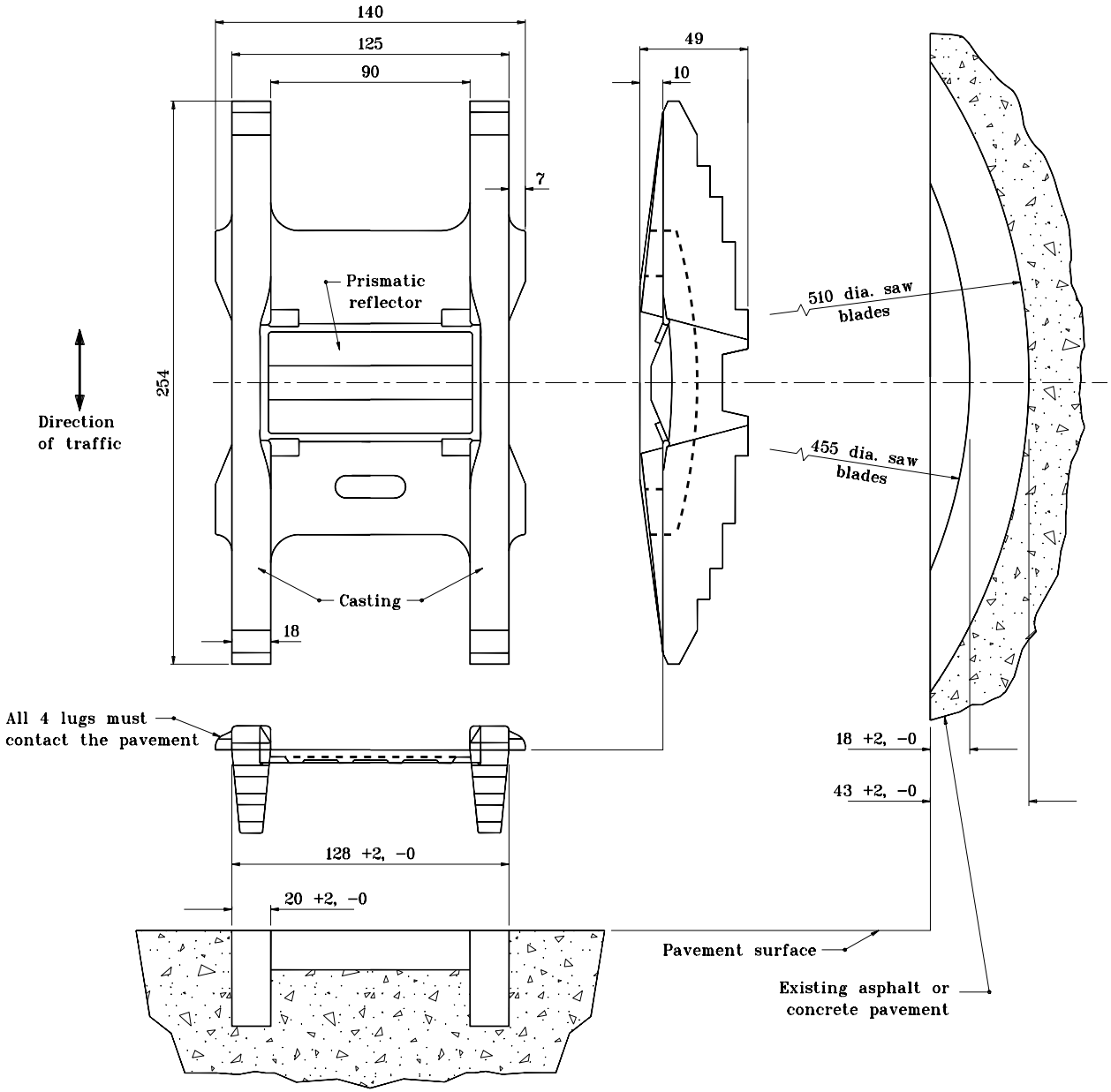

All dimensions are in mm unless otherwise specified.

INDIANA DEPARTMENT OF TRANSPORTATION

RAISED PAVEMENT MARKERS CAST METAL BASE, TYPE 2

JANUARY 2000

STANDARD DRAWING NO. **808-MKRM-11**

ANTHONY L. UREMOVICH REGISTERED No. 18095 STATE OF INDIANA PROFESSIONAL ENGINEER

DESIGN STANDARDS ENGINEER

/s/ Anthony L. Uremovich 1-03-00
DESIGN STANDARDS ENGINEER DATE

/s/ Firooz Zandi 1-03-00
CHIEF HIGHWAY ENGINEER DATE