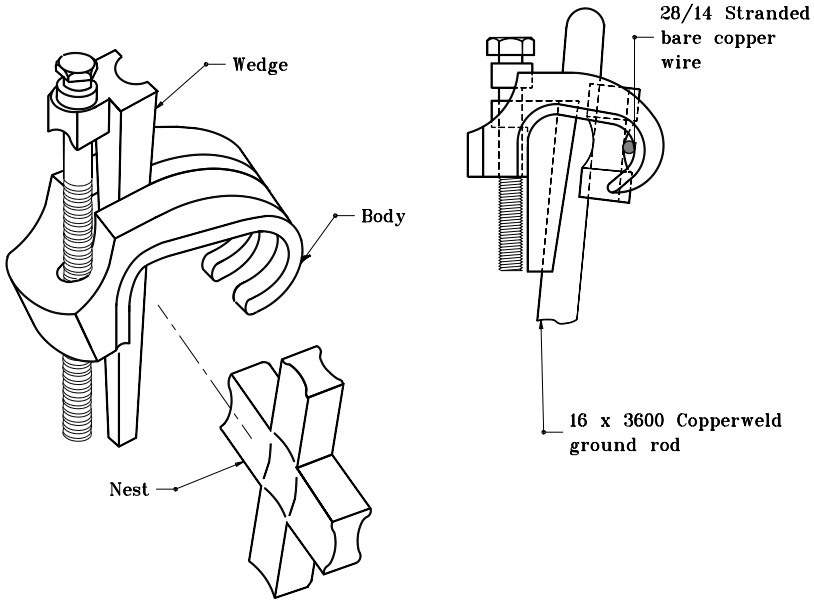

GROUNDING GRID CONNECTOR

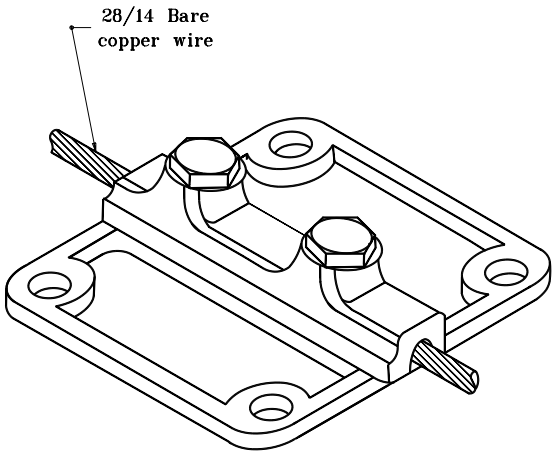

BONDING PLATE
(DETAIL A)

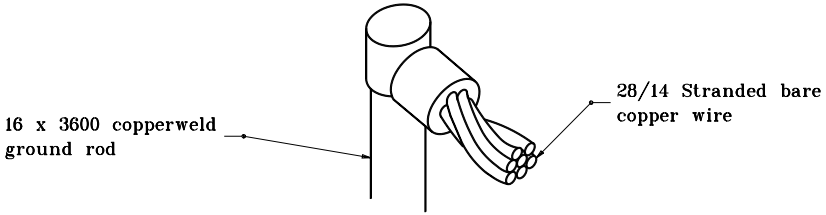

TOP CONNECTION

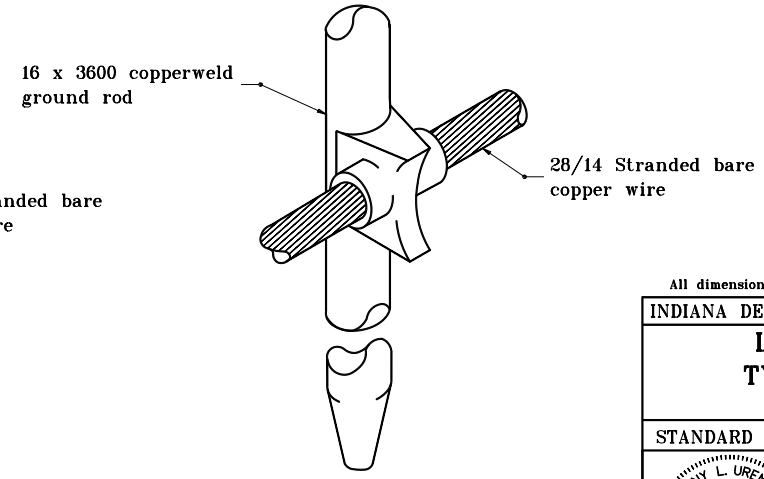

SIDE CONNECTION

THERMOWELD PROCESS

All dimensions are in mm unless otherwise specified.

INDIANA DEPARTMENT OF TRANSPORTATION

LIGHTNING ROD TYPICAL DETAILS

MARCH 1995

STANDARD DRAWING NO. **807-LTLR-02**

ANTHONY L. UREMOVICH REGISTERED No. 18095 STATE OF INDIANA PROFESSIONAL ENGINEER

DESIGN STANDARDS ENGINEER

/s/ Anthony L. Uremovich 3-01-95
DESIGN STANDARDS ENGINEER DATE

/s/ Donald W. Lucas 3-01-95
CHIEF HIGHWAY ENGINEER DATE

Source Sheet: NONE