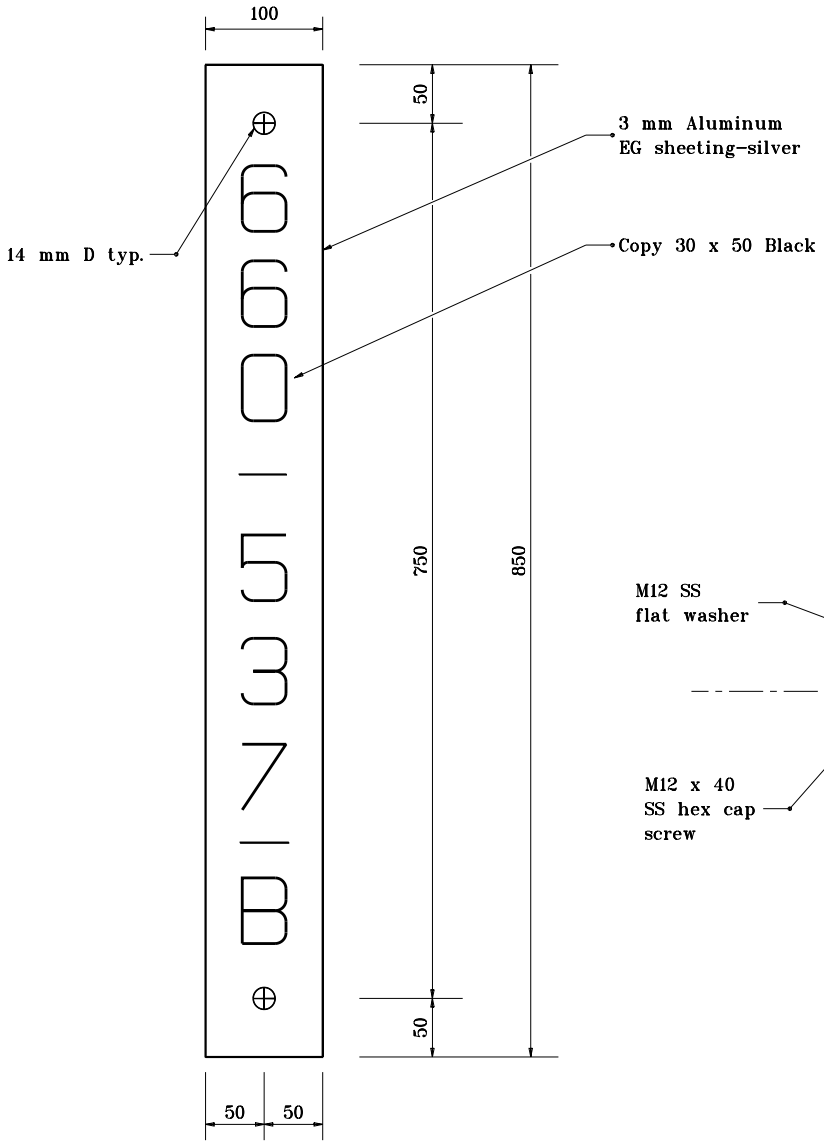

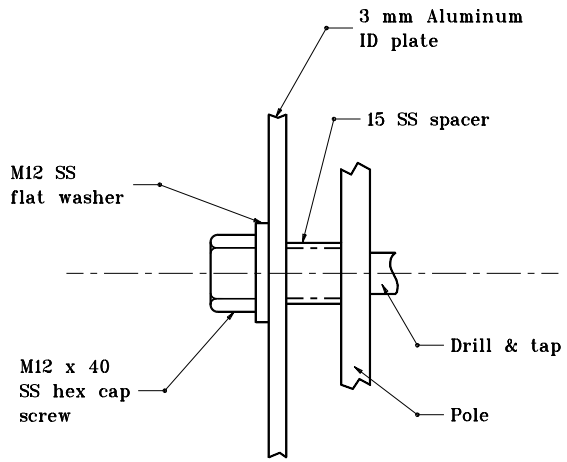

MOUNTING DETAIL

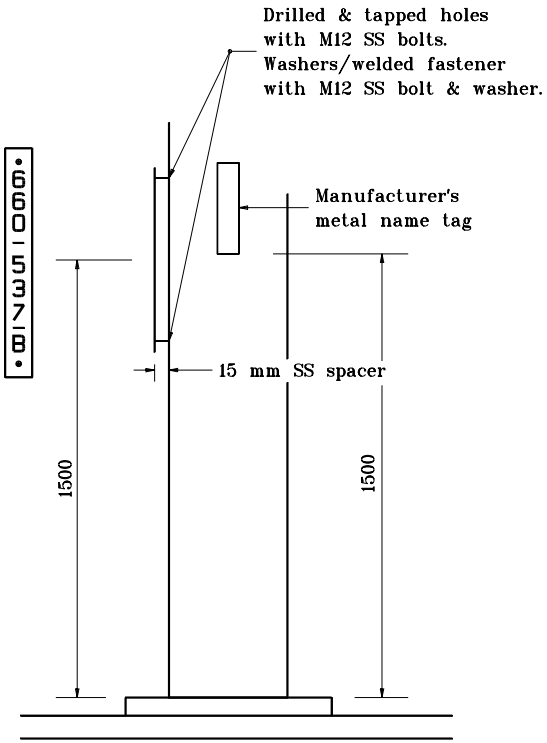

All dimensions are in mm unless otherwise specified.

INDIANA DEPARTMENT OF TRANSPORTATION

HIGH MAST POLE
ID PLATES

MARCH 1995

STANDARD DRAWING NO. **807-LTHM-01**

ANTHONY L. UREMOVICH REGISTERED No. 18095 STATE OF INDIANA PROFESSIONAL ENGINEER

DESIGN STANDARDS ENGINEER

/s/ Anthony L. Uremovich 3-01-95
DESIGN STANDARDS ENGINEER DATE

/s/ Donald W. Lucas 3-01-95
CHIEF HIGHWAY ENGINEER DATE

ID PLATES FOR HIGH MAST POLE

Source Sheet: NONE