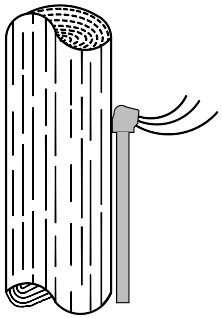

Conduit Riser

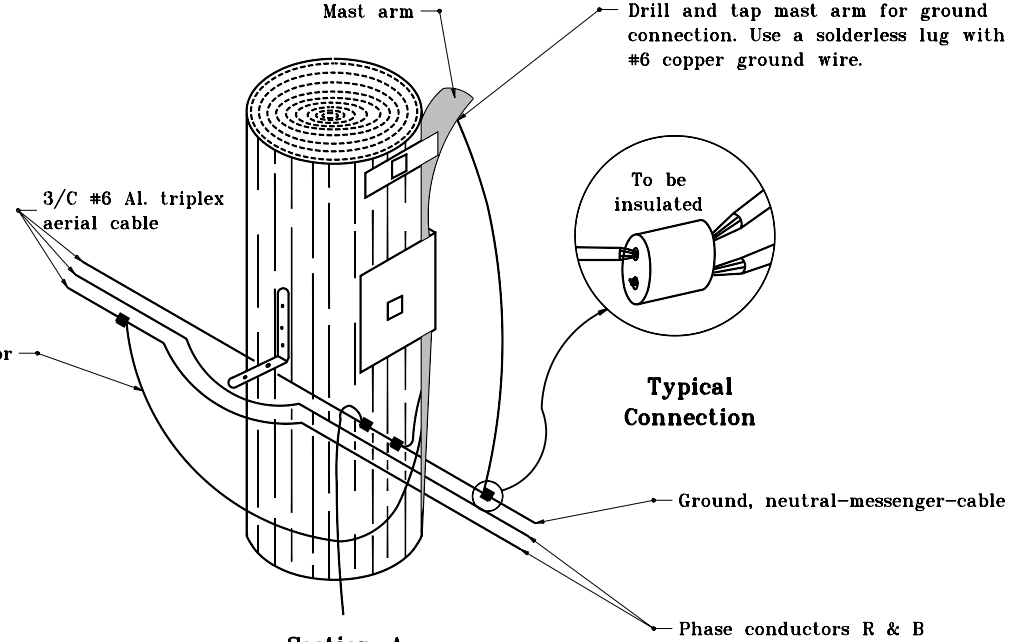

Typical Connection

Section A
Typical Aerial Luminaire Connection with Ground

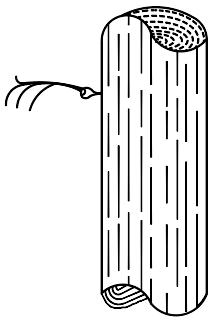

Aerial Cable Termination

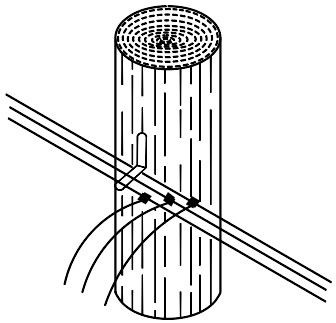

Typical Circuit Connection to Aerial Cable

All dimensions are in mm unless otherwise specified.

INDIANA DEPARTMENT OF TRANSPORTATION

TEMPORARY HIGHWAY ILLUMINATION DETAILS

JANUARY 2000

STANDARD DRAWING NO. **807-LTHI-07**

ANTHONY L. UREMOVICH REGISTERED No. 18095 STATE OF INDIANA PROFESSIONAL ENGINEER

DESIGN STANDARDS ENGINEER

/s/ Anthony L. Uremovich 1-03-00
DESIGN STANDARDS ENGINEER DATE

/s/ Firooz Zandi 1-03-00
CHIEF HIGHWAY ENGINEER DATE