GENERAL NOTES

1. Each foundation shall have an imprinted arrow or arrows on the top of the foundation to indicate the direction of the cable duct run.

(2) See Standard Drawing 807-LTLR-02 for details.

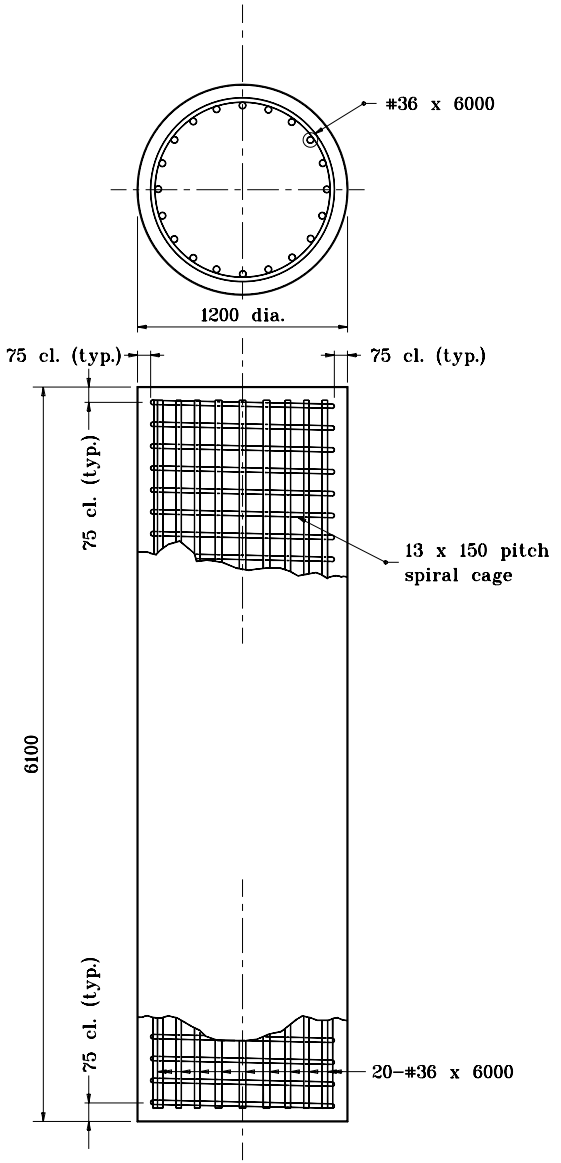

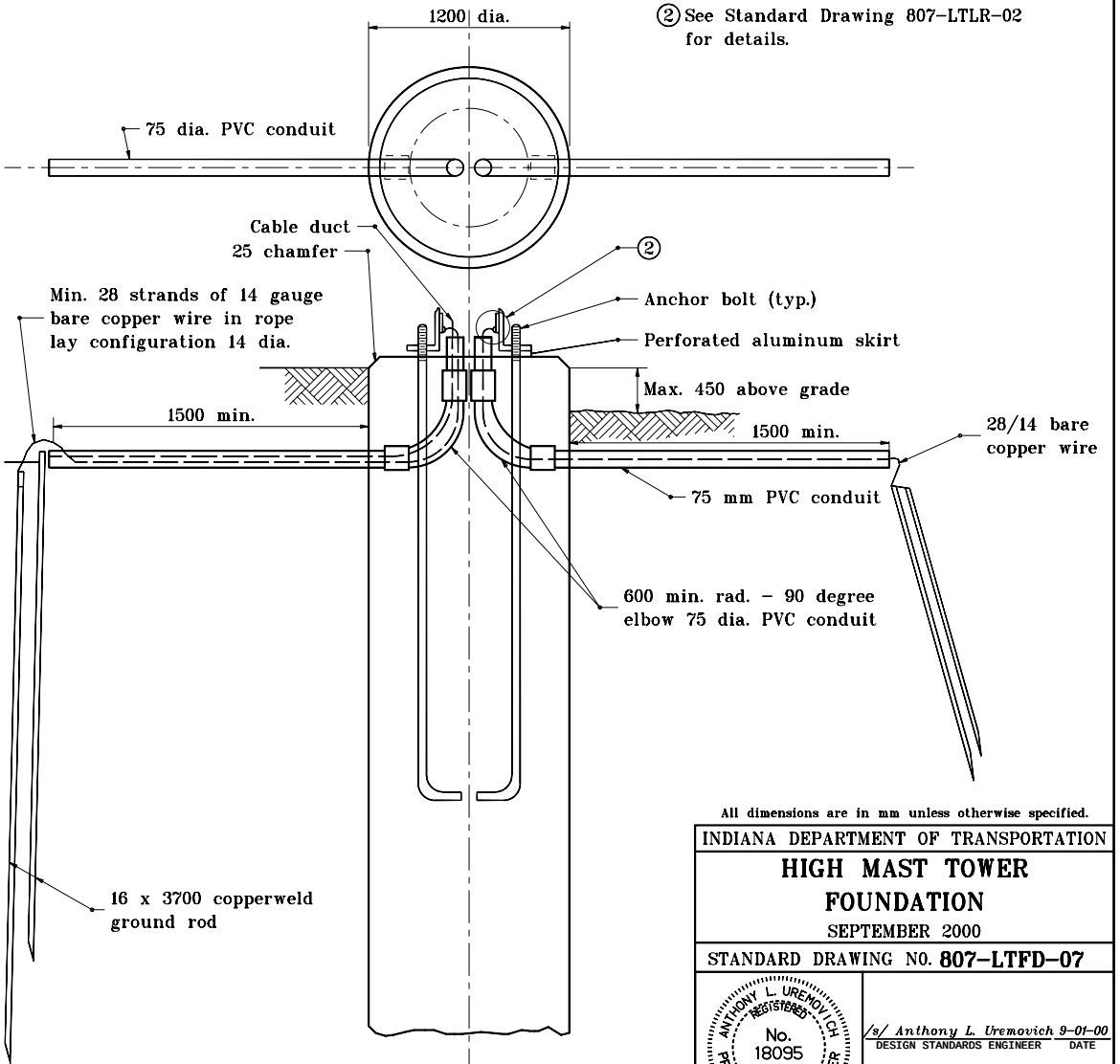

All dimensions are in mm unless otherwise specified.

INDIANA DEPARTMENT OF TRANSPORTATION

HIGH MAST TOWER FOUNDATION

SEPTEMBER 2000

STANDARD DRAWING NO. **807-LTFD-07**

ANTHONY L. UREMOVICH REGISTERED No. 18095 STATE OF INDIANA PROFESSIONAL ENGINEER

DESIGN STANDARDS ENGINEER

/s/ Anthony L. Uremovich 9-01-00
DESIGN STANDARDS ENGINEER DATE

/s/ Firooz Zandi 9-01-00
CHIEF HIGHWAY ENGINEER DATE