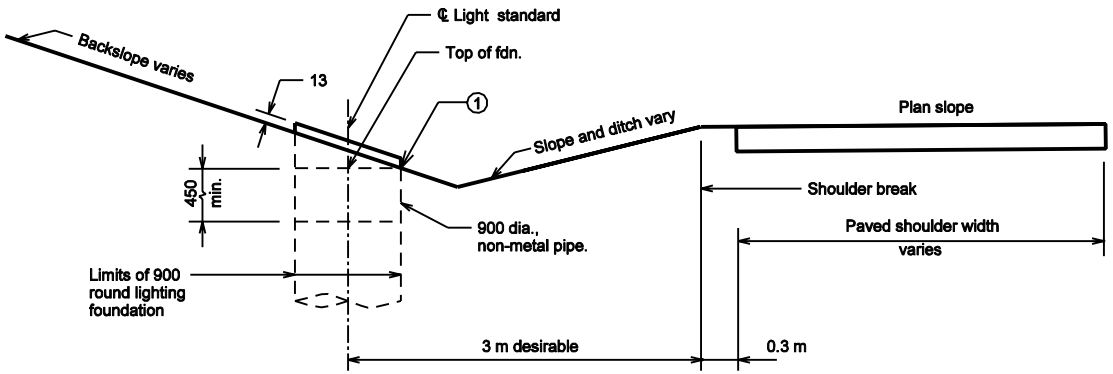

ELEVATION, CUT SECTION, ROUND FOUNDATION

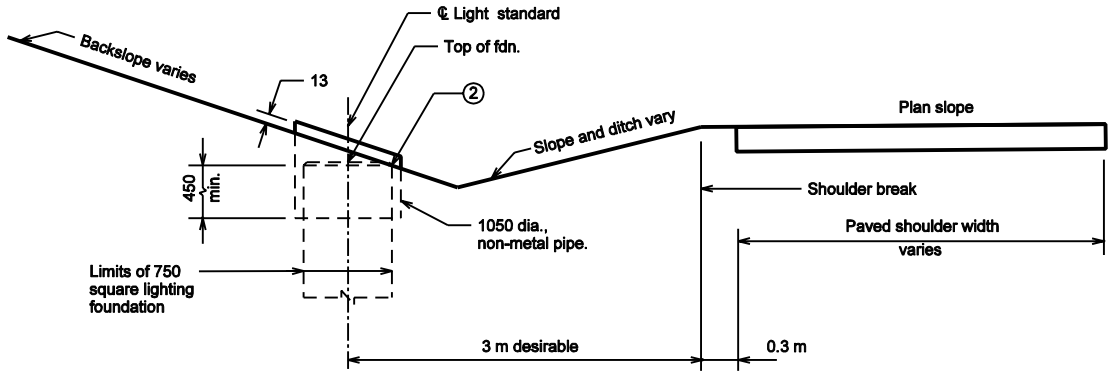

ELEVATION, CUT SECTION, SQUARE FOUNDATION

Notes:

① ② See Standard Drawing 807-LTFD-05 for General Notes.

3. Transformer base door shall face roadway.

4. Foundation shall not be installed on ditch line.

All Dimension are in mm unless otherwise specfied

INDIANA DEPARTMENT OF TRANSPORTATION

LIGHT STANDARD FOUNDATION GRADING CUT SECTION

SEPTEMBER 2002

STANDARD DRAWING NO. 807-LTFD-04

RICHARD L. VANCLEAVE REGISTERED No. 9750 STATE OF INDIANA PROFESSIONAL ENGINEER

DESIGN STANDARDS ENGINEER

/s/ Richard L. VanCleave 9-03-02
DESIGN STANDARDS ENGINEER DATE

/s/ Richard K. Smutzer 9-03-02
CHIEF HIGHWAY ENGINEER DATE