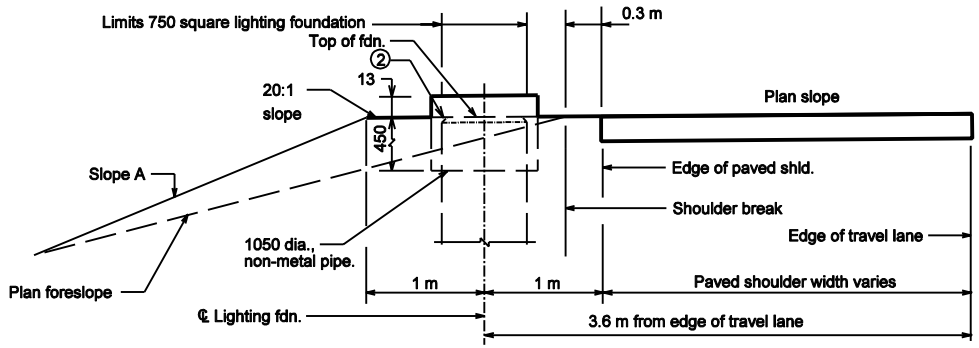

ELEVATION 4:1 OR 3:1 SLOPE

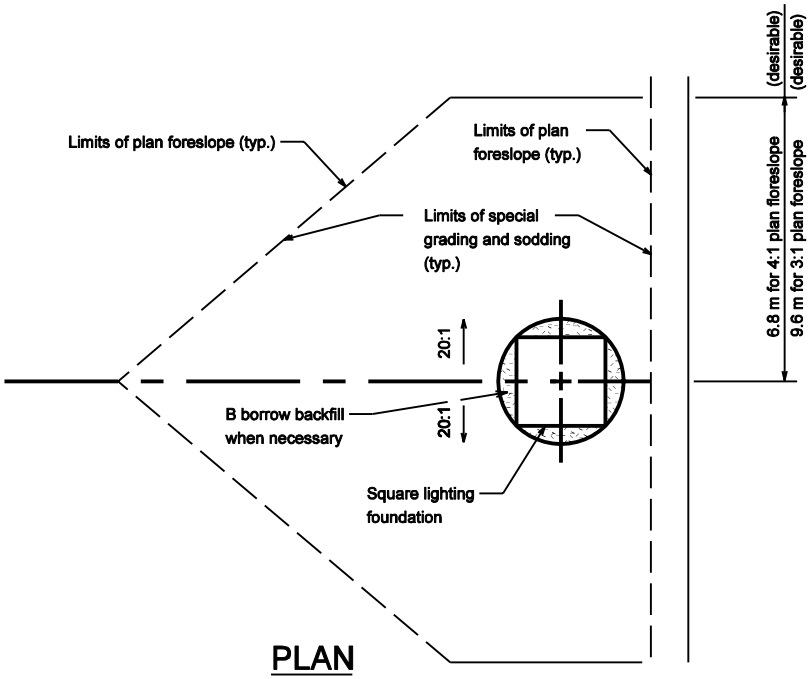

PLAN

Notes:

1. Transformer base door shall face the right-of-way line.

② See Standard Drawing 807-LTFD-05 for General Notes.

Plan foreslope	A
4:1	3:1 Desirable
3:1	2.5:1 Desirable

All Dimension are in mm unless otherwise specfied

INDIANA DEPARTMENT OF TRANSPORTATION

LIGHT STANDARD SQUARE FOUNDATION GRADING FILL SECTION

SEPTEMBER 2002

STANDARD DRAWING NO. 807-LTFD-03A

RICHARD L. VANCLEAVE REGISTERED No. 9750 STATE OF INDIANA PROFESSIONAL ENGINEER

DESIGN STANDARDS ENGINEER

/s/ Richard L. VanCleave 9-03-02
DESIGN STANDARDS ENGINEER DATE

/s/ Richard K. Smulzer 9-03-02
CHIEF HIGHWAY ENGINEER DATE