GENERAL NOTES

1. See Standard Drawing 807-BLIT-03 for bending diagrams.

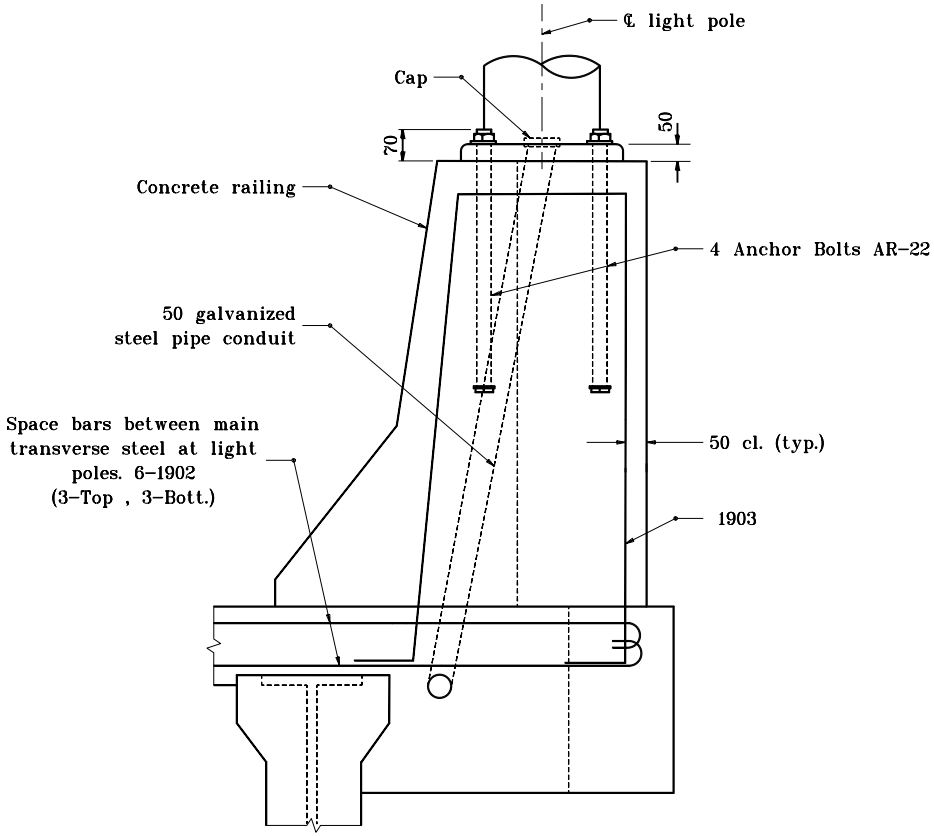

SECTION

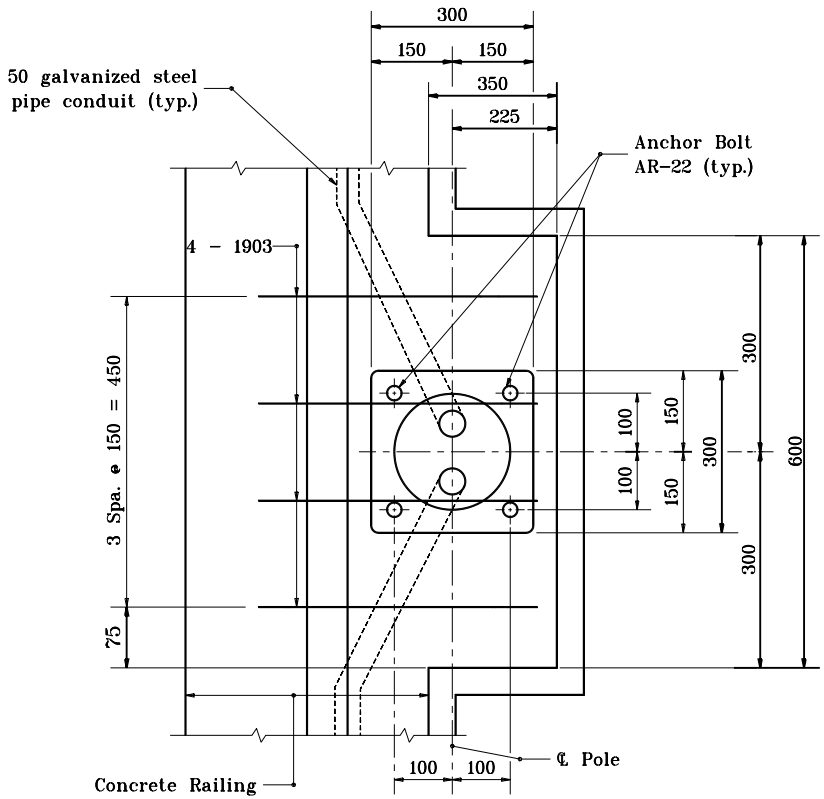

The bolt circle diameter is approximately 290.

PLAN

All dimensions are in mm unless otherwise specified.

INDIANA DEPARTMENT OF TRANSPORTATION

BRIDGE LIGHTING DETAILS

SEPTEMBER 1997

STANDARD DRAWING NO. **807-BLIT-01**

ANTHONY L. UREMOVICH REGISTERED No. 18095 STATE OF INDIANA PROFESSIONAL ENGINEER

DESIGN STANDARDS ENGINEER

/s/ Anthony L. Uremovich 9-01-97
DESIGN STANDARDS ENGINEER DATE

/s/ Donald W. Lucas 9-01-97
CHIEF HIGHWAY ENGINEER DATE

Source Sheet: R2-B