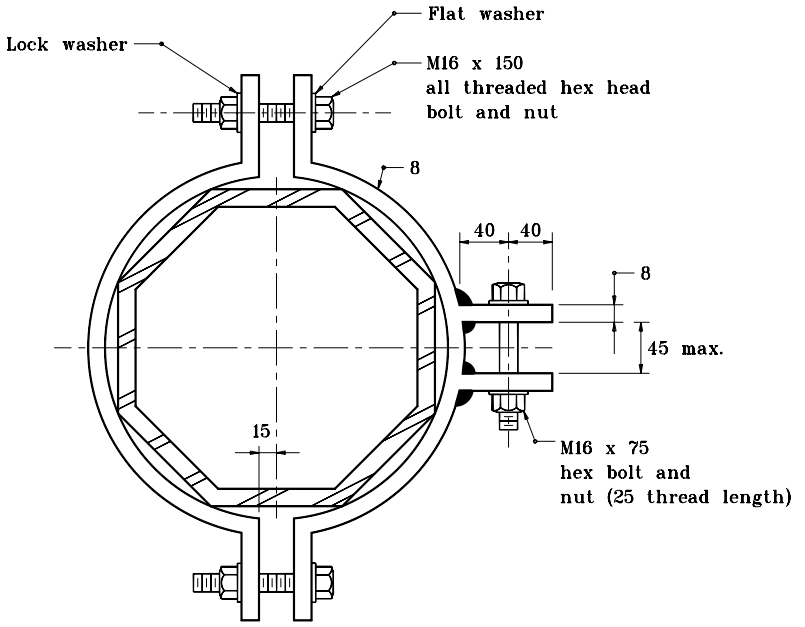

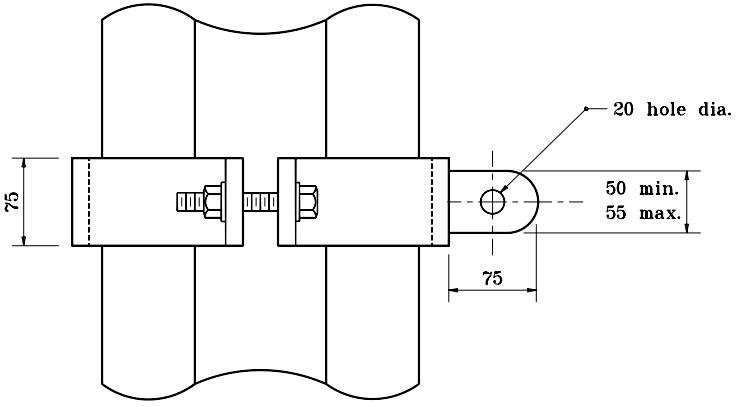

REQUIRES TWO POLE BANDS AT EACH POSITION ON POLE (SIX BANDS PER POLE)

All dimensions are in mm unless otherwise specified.

INDIANA DEPARTMENT OF TRANSPORTATION

POLE BAND FOR SIGNAL STEEL STRAIN POLE

SEPTEMBER 1998

STANDARD DRAWING NO. **805-SGSP-03**

ANTHONY L. UREMOVICH REGISTERED No. 18095 STATE OF INDIANA PROFESSIONAL ENGINEER

DESIGN STANDARDS ENGINEER

/s/ Anthony L. Uremovich 9-01-98
DESIGN STANDARDS ENGINEER DATE

/s/ Donald W. Lucas 9-01-98
CHIEF HIGHWAY ENGINEER DATE

Source Sheet: NONE