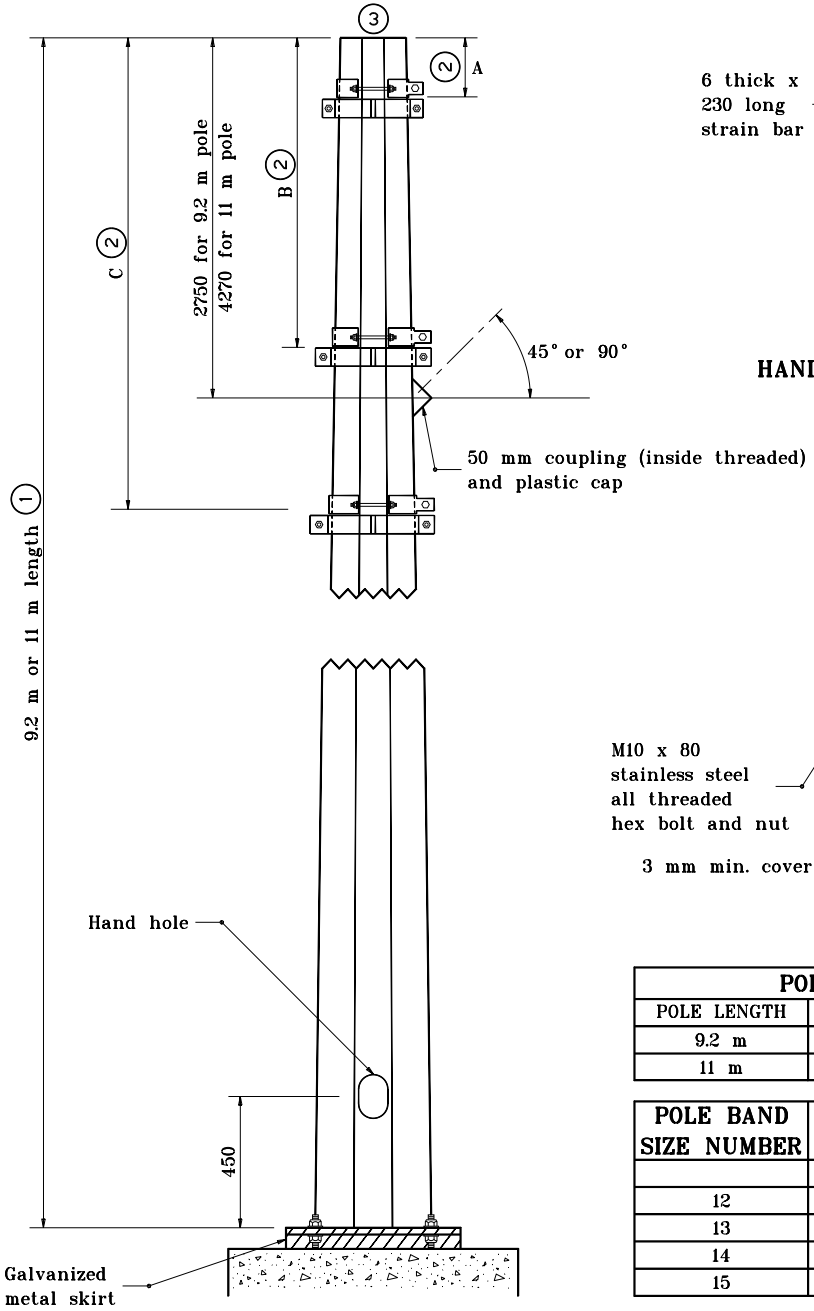

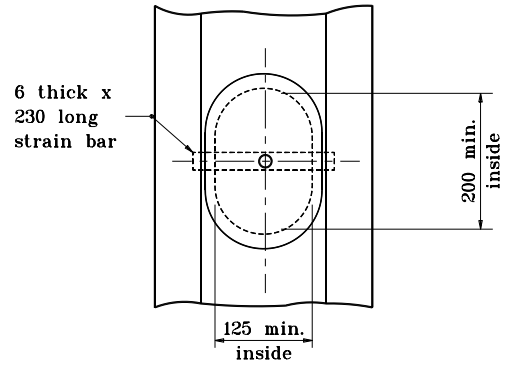

HANDHOLE AND GROUNDING LUG

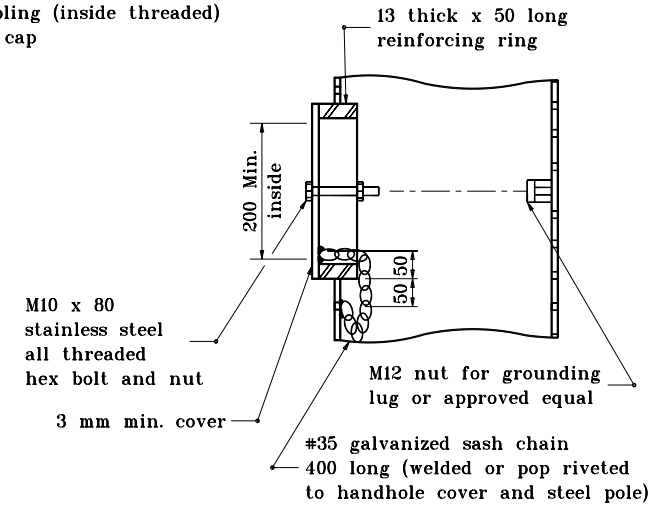

GENERAL NOTES:

1. Taper pole 12 mm per meter of length.
2. Band position can be variable depending of minimum clearance requirement of tether the cable over the road, and the elevation of the top of the foundation relative to the top of the traveled roadway.
3. Design load of 38 kN applied perpendicular to pole axis 450 from top of pole.

POLE BAND POSITION

POLE LENGTH	A	B	C
9.2 m	150	2450	3650
11 m	300	4000	5200

POLE BAND SIZE NUMBER	O.D.(ACROSS POINTS) OF POLE (ROUND OR MULTISIDED)	
	MIN.	MAX.
12	295	330
13	330	360
14	355	385
15	380	405

All dimensions are in mm unless otherwise specified.

INDIANA DEPARTMENT OF TRANSPORTATION

9.2 m AND 11 m SIGNAL STEEL STRAIN POLES

MARCH 1995

STANDARD DRAWING NO. **805-SGSP-01**

ANTHONY L. UREMOVICH REGISTERED No. 18095 STATE OF INDIANA PROFESSIONAL ENGINEER

DESIGN STANDARDS ENGINEER

/s/ Anthony L. Uremovich 3-01-95
DESIGN STANDARDS ENGINEER DATE

/s/ Donald W. Lucas 3-01-95
CHIEF HIGHWAY ENGINEER DATE

Source Sheet: NONE