GENERAL NOTES

1. Installation is the same for steel strain poles except pole bands will be used.
2. Aircraft cable shall use a heavy closed wire rope thimble at contact with pole bands.

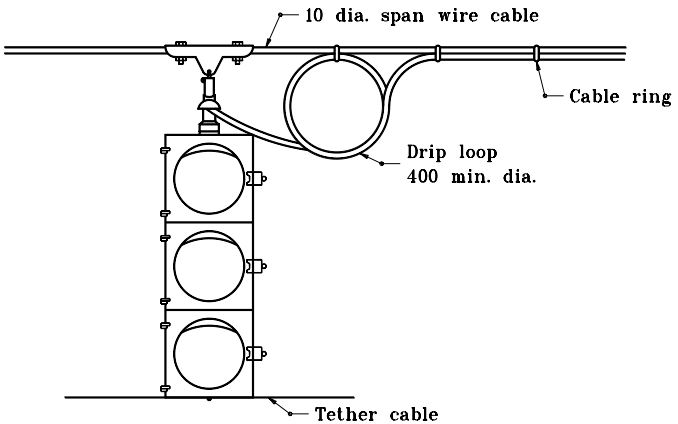

SPAN-HEAD ATTACHMENT

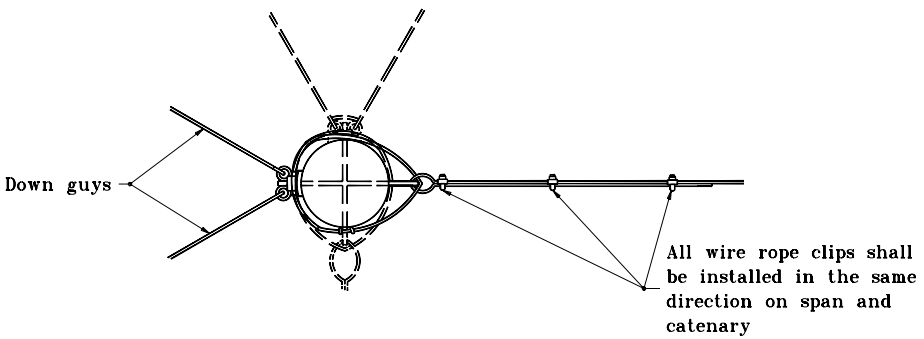

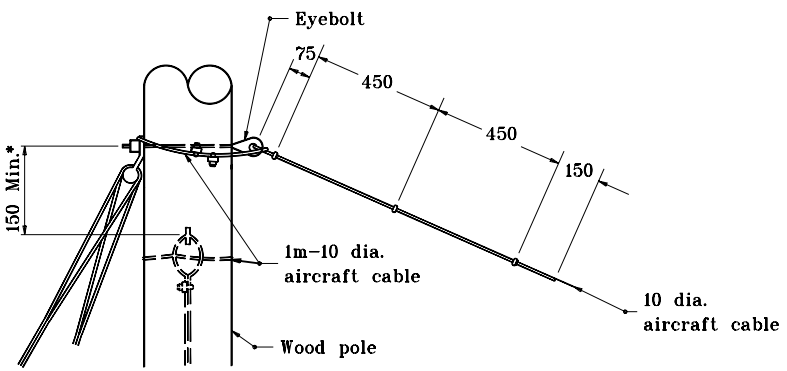

SAFETY CABLE AND EYE BOLT DETAIL

* If more than one catenary is attached to pole

All dimensions are in mm unless otherwise specified.

INDIANA DEPARTMENT OF TRANSPORTATION

CABLE SPAN ATTACHMENT

SEPTEMBER 1998

STANDARD DRAWING NO. **805-SGSC-03**

ANTHONY L. UREMOVICH REGISTERED No. 18095 STATE OF INDIANA PROFESSIONAL ENGINEER

DESIGN STANDARDS ENGINEER

/s/ Anthony L. Uremovich 9-01-98
DESIGN STANDARDS ENGINEER DATE

/s/ Donald W. Lucas 9-01-98
CHIEF HIGHWAY ENGINEER DATE

Source Sheet: NONE