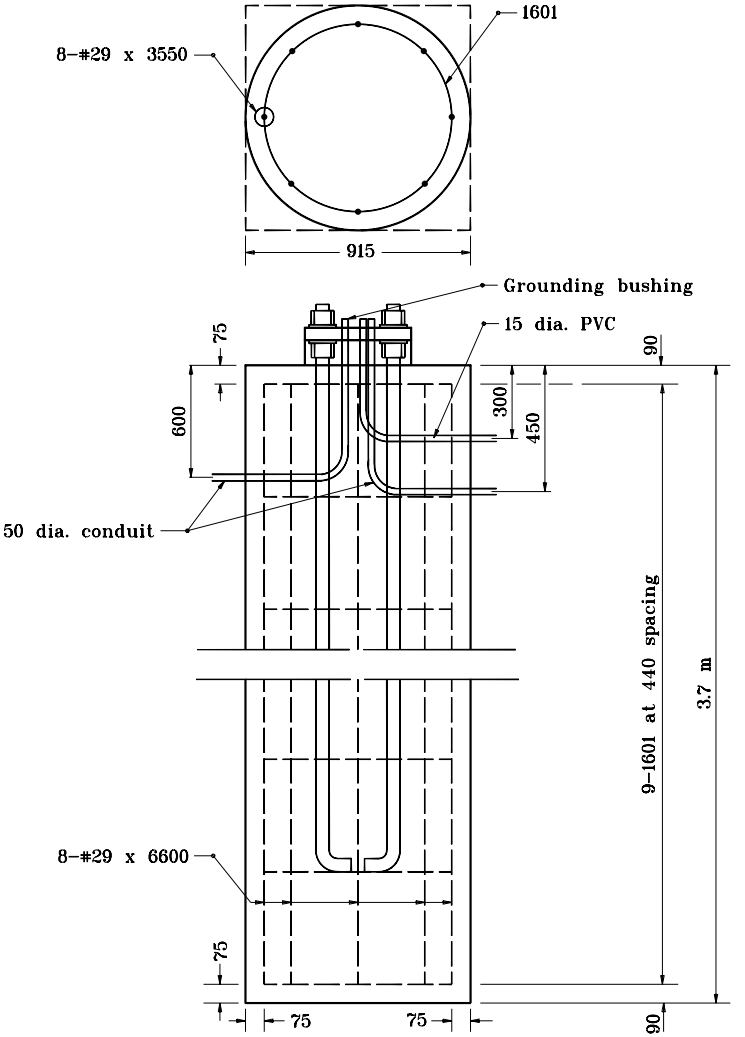

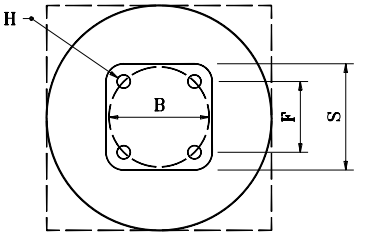

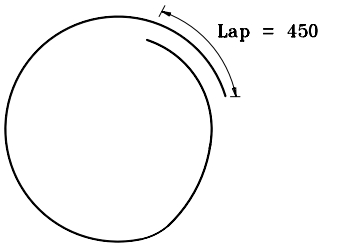

1601 x 2850

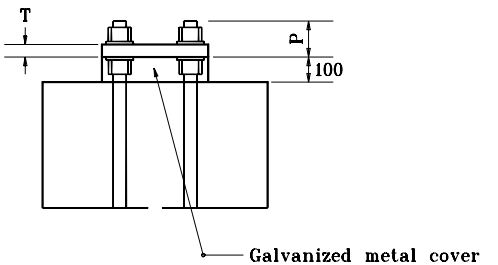

All dimensions are in mm unless otherwise specified.

BASE PLATE AND ANCHOR BOLT DATA								
Anchor bolts	B	F	H	P	S	T	Pole size	Foundation
M56 x 2450	560	395	68	120	585	65	380 x 9.3 m 430 x 11.0 m	915 x 3.7 m

INDIANA DEPARTMENT OF TRANSPORTATION

STEEL SIGNAL STRAIN POLE FOUNDATION DETAILS

MARCH 2002

STANDARD DRAWING NO. **805-SGSC-02**

RICHARD L. VanCLEAVE REGISTERED No. 9750 STATE OF INDIANA PROFESSIONAL ENGINEER

DESIGN STANDARDS ENGINEER

/s/ Richard L. VanCleave 3-01-02
DESIGN STANDARDS ENGINEER DATE

/s/ Richard K. Smutzer 3-01-02
CHIEF HIGHWAY ENGINEER DATE