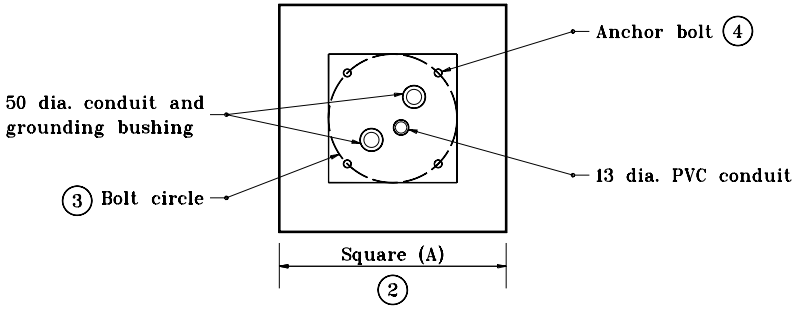

GENERAL NOTES

1. Top 150 of foundation may be squared.

(2) A round foundation may be supplied in lieu of square using the following equivalent (A) dimensions:
750 Square = 900 Round
900 Square = 1050 Round

(3) See Base Plate Detail on Standard Drawing 805-SGMA-05.

(4) See Standard Drawing 805-SGMA-05 for Detail D.

SIGNAL CANTILEVER FOUNDATION DIMENSIONS		
ARM LENGTH (L), m	SQUARE (A)	FDN. DEPTH (B)
3.6, 4.6, 6.1, 7.6	750	2100
9.1, 10.7, 12.2 All Twin Arms	900	2500
* Combination Pole (With Luminaire)	900	2500

* Requires 4-#10 x 2350 as shown on foundation detail.

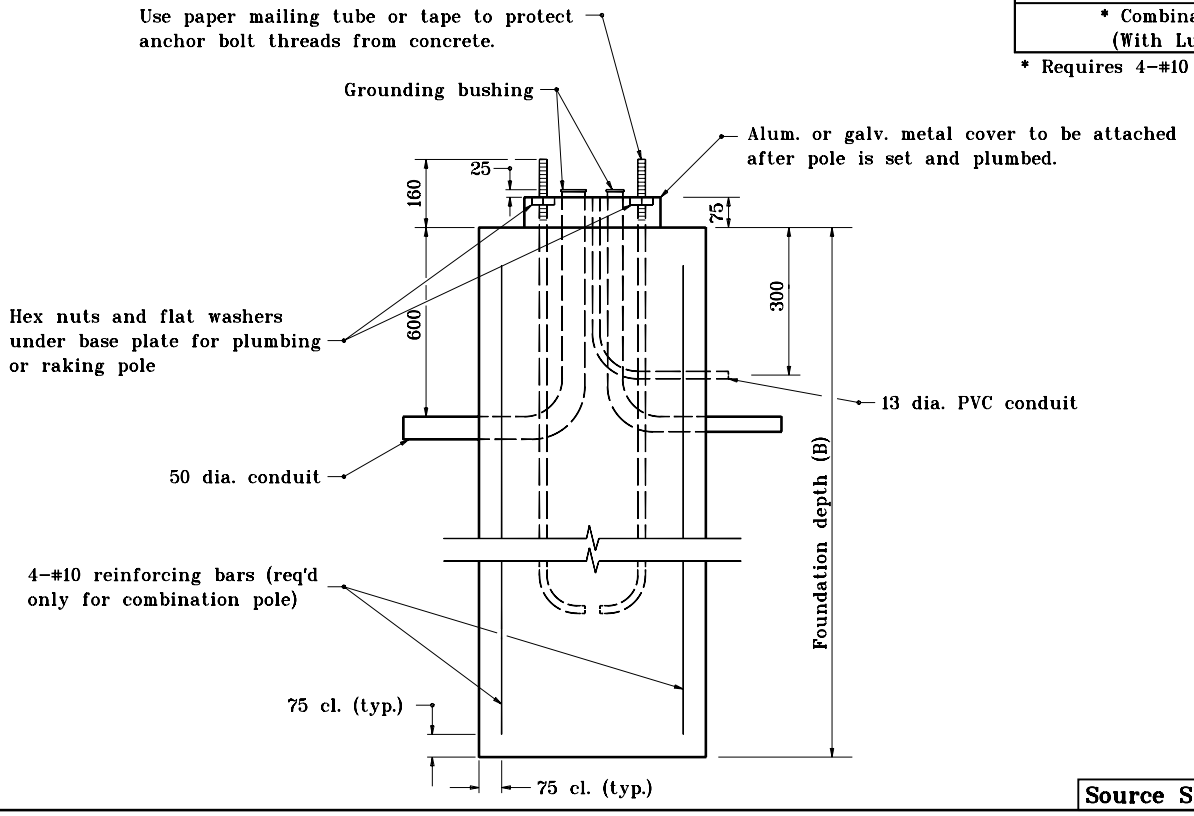

All dimensions are in mm unless otherwise specified.

INDIANA DEPARTMENT OF TRANSPORTATION

SIGNAL CANTILEVER FOUNDATION DETAIL

SEPTEMBER 1998

STANDARD DRAWING NO. **805-SGMA-03**

ANTHONY L. UREMOVICH REGISTERED No. 18095 STATE OF INDIANA PROFESSIONAL ENGINEER

DESIGN STANDARDS ENGINEER

/s/ Anthony L. Uremovich — DESIGN STANDARDS ENGINEER — 9-01-98 DATE

/s/ Donald W. Lucas — CHIEF HIGHWAY ENGINEER — 9-01-98 DATE

Source Sheet: NONE