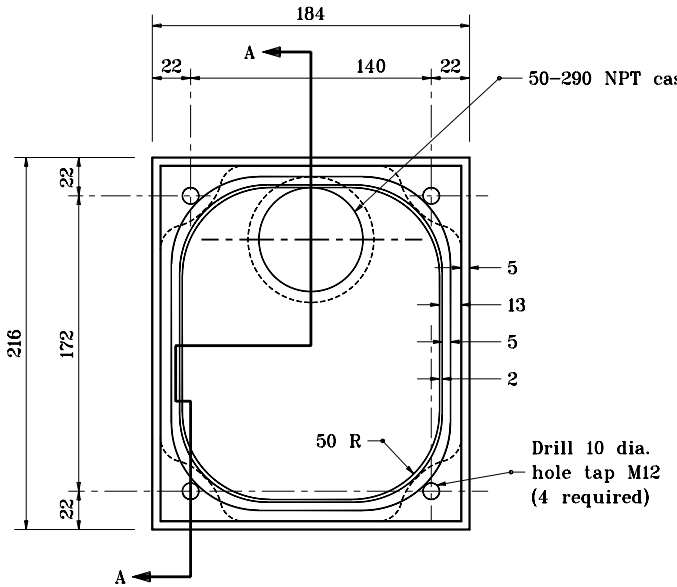

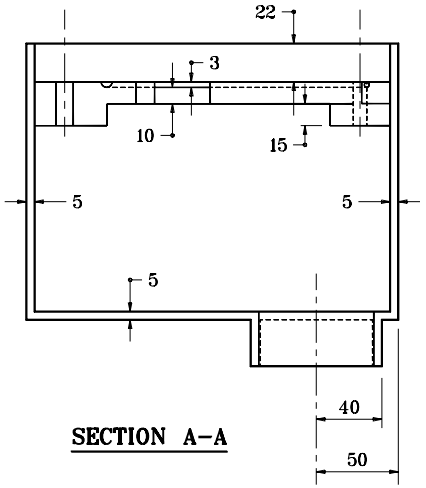

SECTION A–A

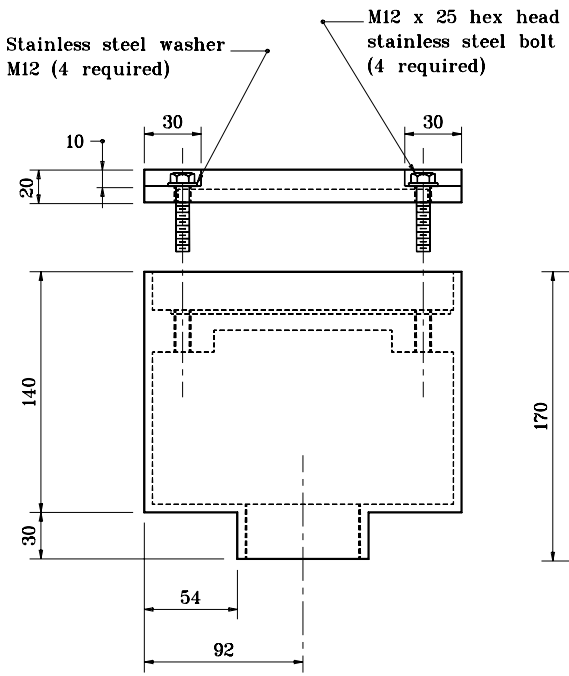

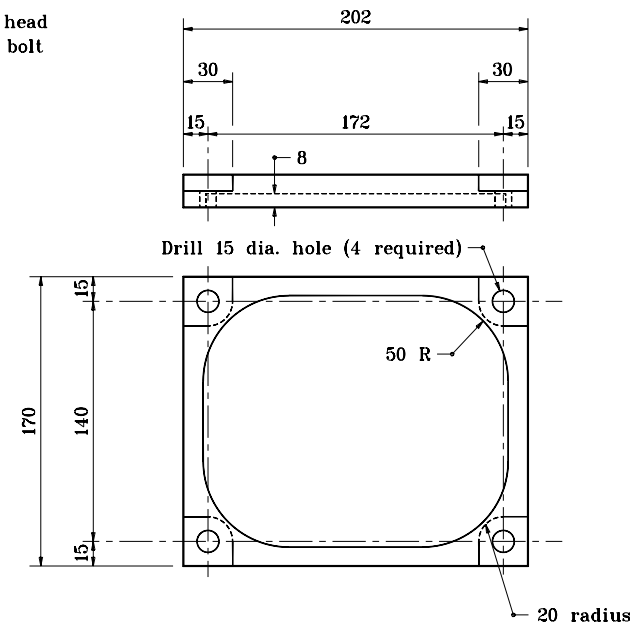

All dimensions are in mm unless otherwise specified.

INDIANA DEPARTMENT OF TRANSPORTATION

DETAIL OF DETECTOR HOUSING

MAY 1998

STANDARD DRAWING NO. **805–SGDH–02**

ANTHONY L. UREMOVICH REGISTERED No. 18095 STATE OF INDIANA PROFESSIONAL ENGINEER

/s/ Anthony L. Uremovich 5-01-98
DESIGN STANDARDS ENGINEER DATE

/s/ Donald W. Lucas 5-01-98
CHIEF HIGHWAY ENGINEER DATE

DESIGN STANDARDS ENGINEER

Source Sheet: NONE