GENERAL NOTES

1. End bent extensions are to be hot-dipped galvanized after fabrication (steel sections only.)
2. End bent extensions to have the same bolt circle and hole spacing on both ends.
3. End bent extensions may be either aluminum or steel as indicated in the special provisions.

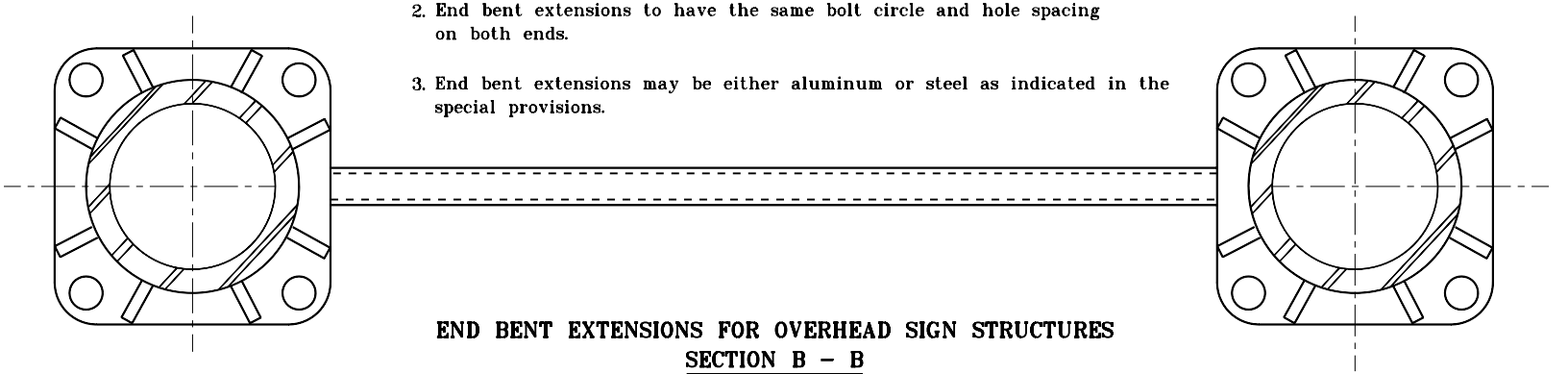

END BENT EXTENSIONS FOR OVERHEAD SIGN STRUCTURES

SECTION B – B

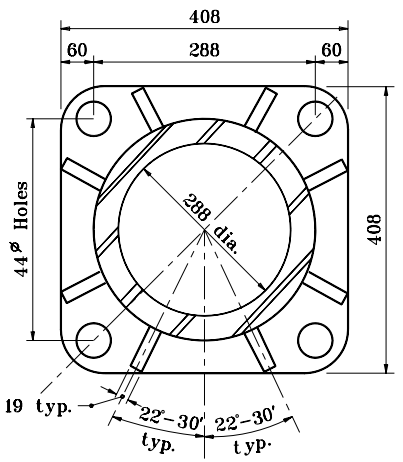

SECTION C–C

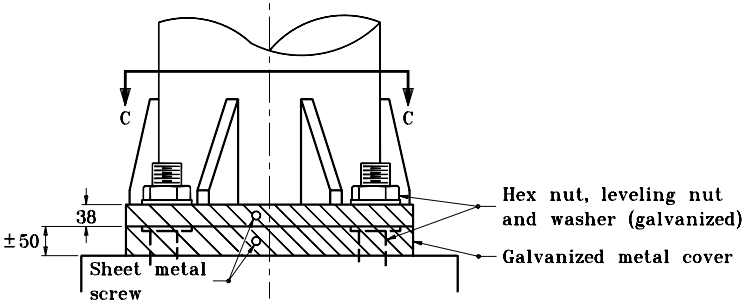

All dimensions are in mm unless otherwise specified.

INDIANA DEPARTMENT OF TRANSPORTATION

SIGN STRUCTURE DETAILS

SEPTEMBER 2001

STANDARD DRAWING NO. **802-SNOH-14**

ANTHONY L. UREMOVICH REGISTERED No. 18095 STATE OF INDIANA PROFESSIONAL ENGINEER

DESIGN STANDARDS ENGINEER

/s/ Anthony L. Uremovich 9-04-01
DESIGN STANDARDS ENGINEER DATE

/s/ Firooz Zandi 9-04-01
CHIEF HIGHWAY ENGINEER DATE