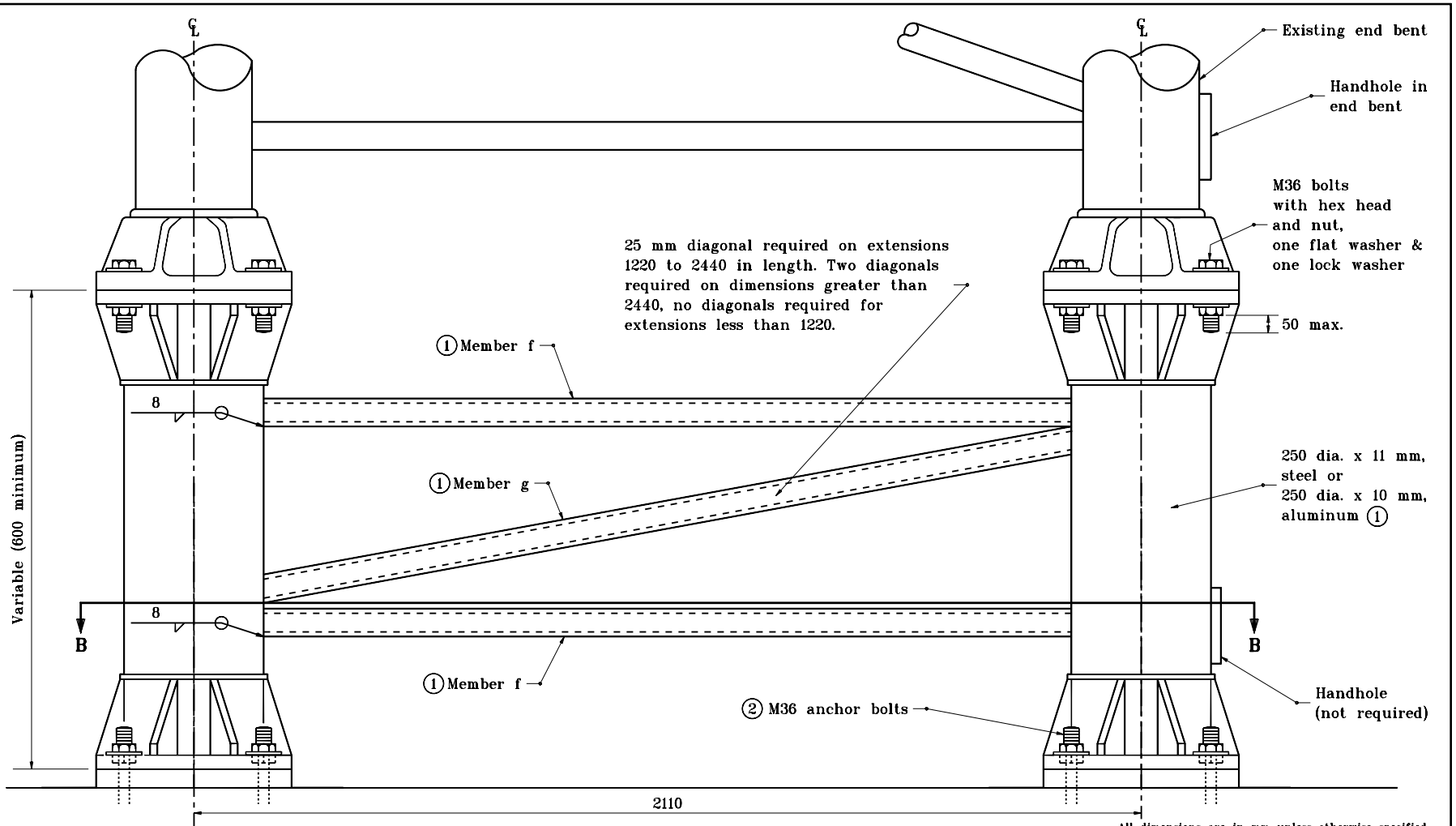

All dimensions are in mm unless otherwise specified.

1 See Std. Dws. 802-SNOH-01 through 04

2 See Std. Dws. 802-SNOH-05 through 09

3. See Std. Dwg. 802-SNOH-14 for Section B-B.

END BENT EXTENSIONS FOR OVERHEAD SIGN STRUCTURES

INDIANA DEPARTMENT OF TRANSPORTATION

SIGN STRUCTURE DETAILS

SEPTEMBER 2001

STANDARD DRAWING NO. **802-SNOH-13**

ANTHONY L. UREMOVICH REGISTERED No. 18095 STATE OF INDIANA PROFESSIONAL ENGINEER

DESIGN STANDARDS ENGINEER

/s/ Anthony L. Uremovich 9-04-01
DESIGN STANDARDS ENGINEER DATE

/s/ Firooz Zandi 9-04-01
CHIEF HIGHWAY ENGINEER DATE