GENERAL NOTES

1. Drill and tap two holes 180° apart for M12 stainless steel set screws.
2. Sand-cast aluminum alloy.

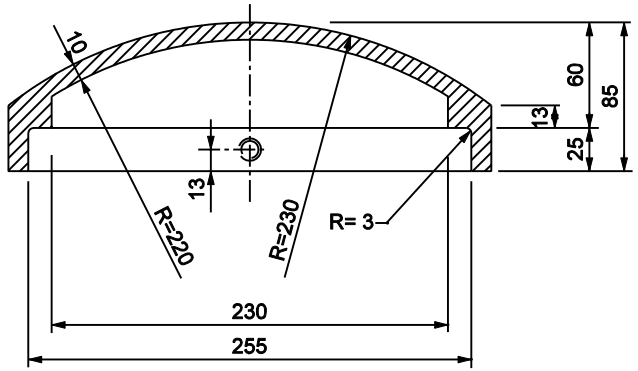

SECTION A-A

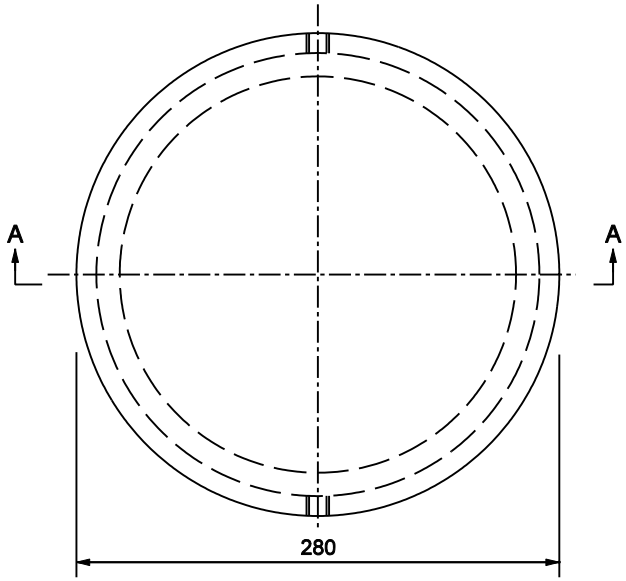

250 O.D. POLE TOP CASTING

All Dimension are in mm unless otherwise specfied

INDIANA DEPARTMENT OF TRANSPORTATION

ALUMINUM STRUCTURE
POLE TOP CASTING

MARCH 2003

STANDARD DRAWING NO. 802-SNOH-08

RICHARD L. VanCLEAVE REGISTERED No. 9750 STATE OF INDIANA PROFESSIONAL ENGINEER

DESIGN STANDARDS ENGINEER

/s/ Richard L. VanCleave 3-03-03
DESIGN STANDARDS ENGINEER DATE

/s/ Richard K. Smutzer 3-03-03
CHIEF HIGHWAY ENGINEER DATE