GENERAL NOTES

1. For connection details see Sign Wiring Details on the plans.

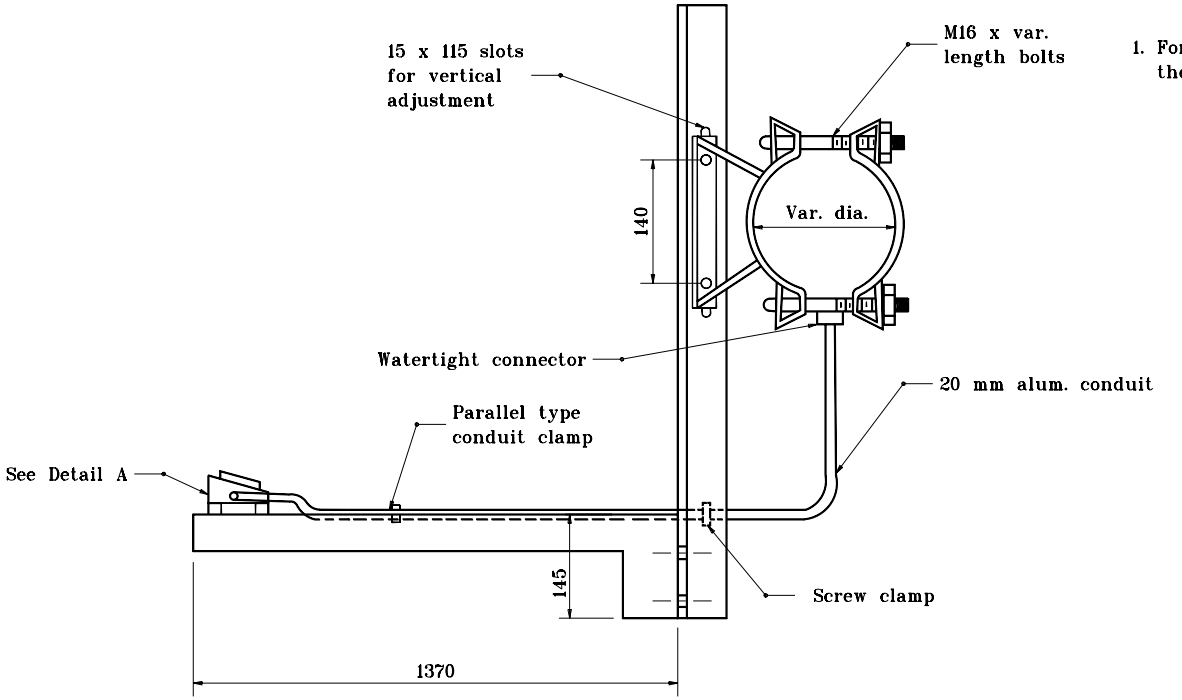

CONDUIT / LIGHTING DETAIL
(For single arm or beam sign bracket)

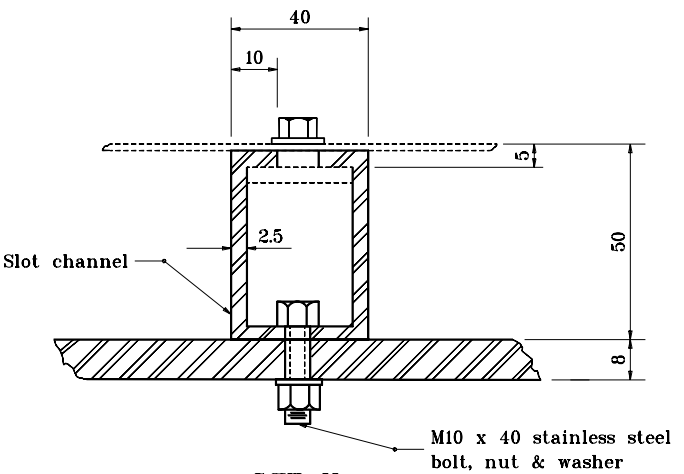

DETAIL A

All dimensions are in mm unless otherwise specified.

INDIANA DEPARTMENT OF TRANSPORTATION

CONDUIT / LIGHTING

SEPTEMBER 2001

STANDARD DRAWING NO. **802-SNIL-07**

ANTHONY L. UREMOVICH REGISTERED No. 18095 STATE OF INDIANA PROFESSIONAL ENGINEER

DESIGN STANDARDS ENGINEER

/s/ Anthony L. Uremovich — DESIGN STANDARDS ENGINEER — 9-04-01 DATE

/s/ Firooz Zandi — CHIEF HIGHWAY ENGINEER — 9-04-01 DATE