Only washers on the inside of the wide flange (next to web) need to be cut.

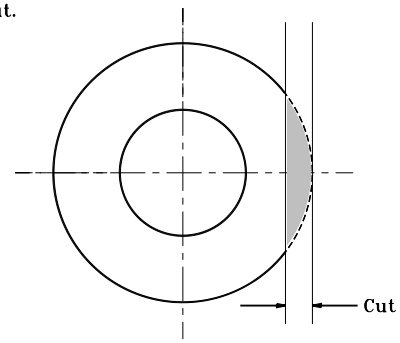

WASHER

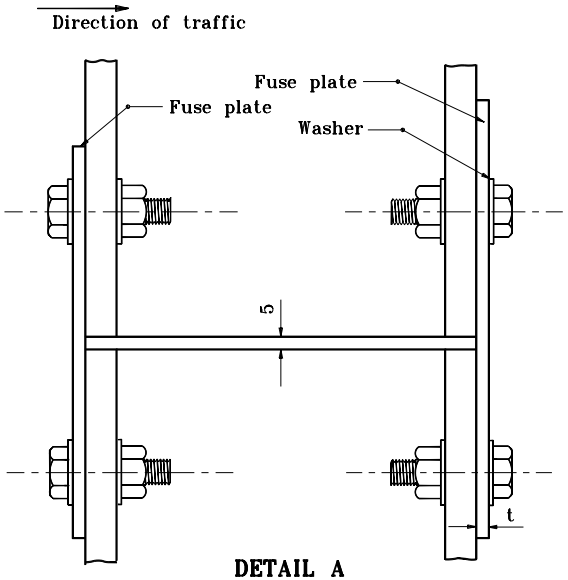

DETAIL A
FOR NON-DIVIDED HIGHWAY INSTALLATION

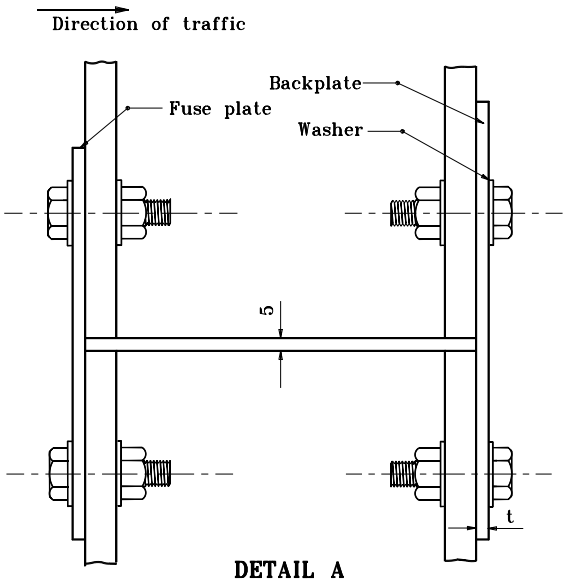

DETAIL A
FOR DIVIDED HIGHWAY INSTALLATION

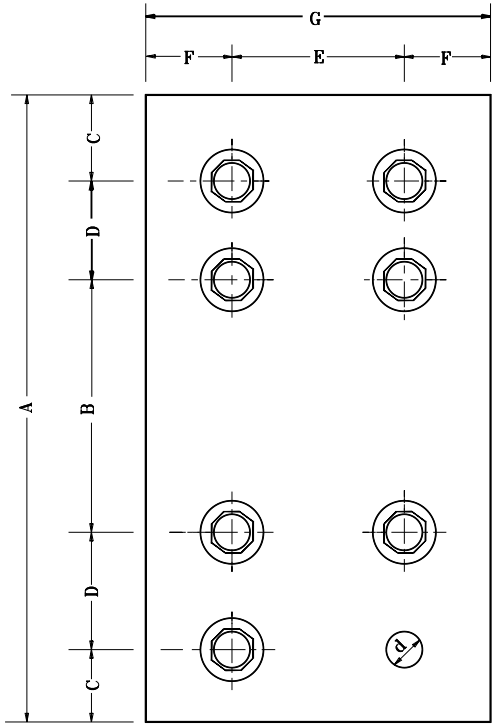

BACKPLATE DETAIL
(8 Bolts)

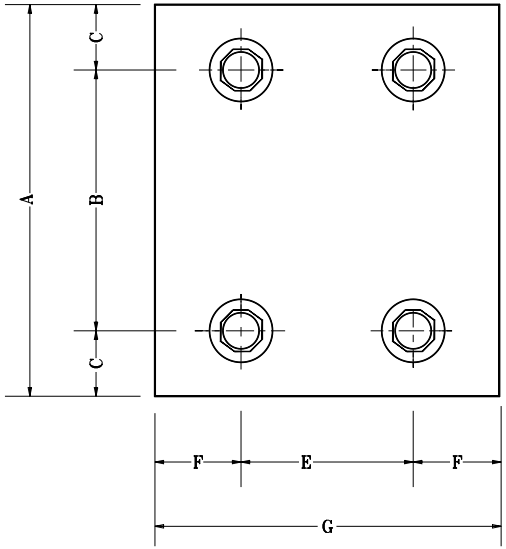

BACKPLATE DETAIL
(4 Bolts)

GENERAL NOTES

1. For fuse plate details, see Std. Dwg. No. 802-SNGP-04.

All dimensions are in mm unless otherwise specified.

INDIANA DEPARTMENT OF TRANSPORTATION

PANEL SIGN BACKPLATE DETAILS

MARCH 1995

STANDARD DRAWING NO. **802-SNGP-09**

ANTHONY L. UREMOVICH REGISTERED No. 18095 STATE OF INDIANA PROFESSIONAL ENGINEER

DESIGN STANDARDS ENGINEER

/s/ Anthony L. Uremovich 3-01-95
DESIGN STANDARDS ENGINEER DATE

/s/ Donald W. Lucas 3-01-95
CHIEF HIGHWAY ENGINEER DATE

Source Sheet: MT1A