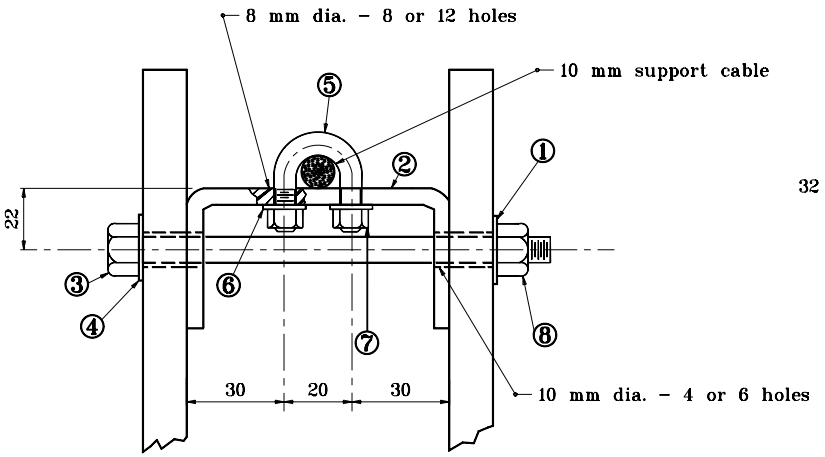

DETAIL A

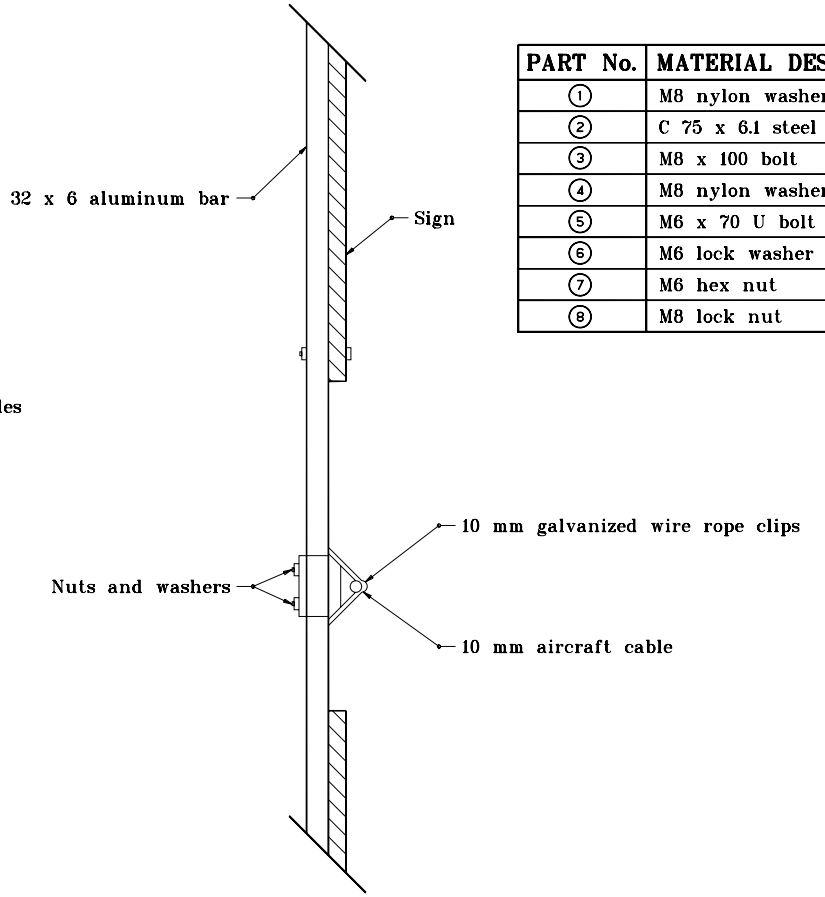

DETAIL B

PART No.	MATERIAL DESCRIPTION
①	M8 nylon washer
②	C 75 x 6.1 steel channel
③	M8 x 100 bolt
④	M8 nylon washer
⑤	M6 x 70 U bolt
⑥	M6 lock washer
⑦	M6 hex nut
⑧	M8 lock nut

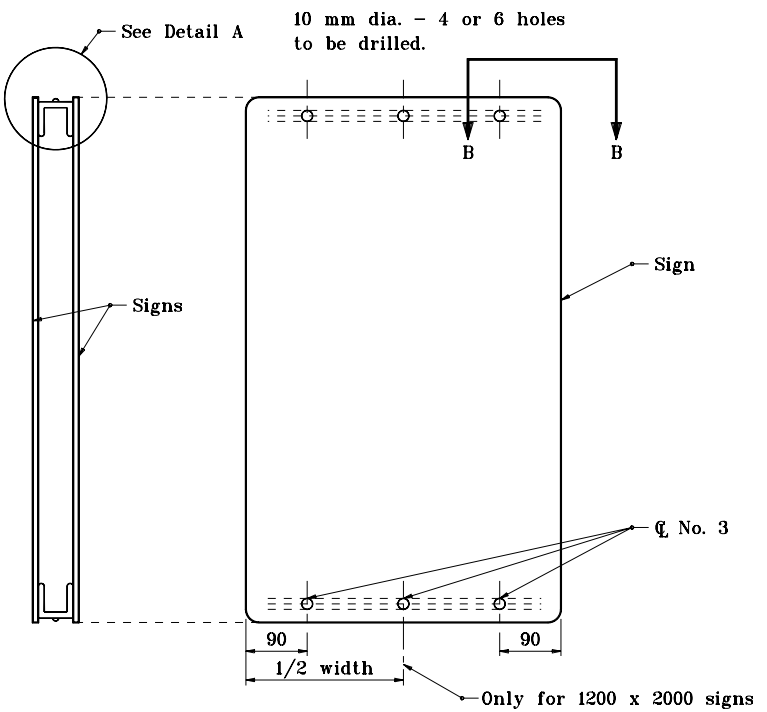

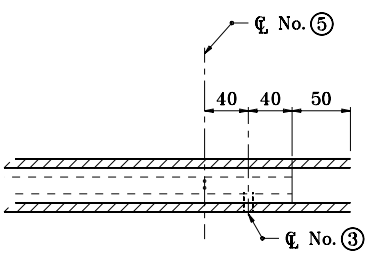

B–B TOP VIEW

All dimensions are in mm unless otherwise specified.

INDIANA DEPARTMENT OF TRANSPORTATION

CABLE SPAN SIGN STRUCTURE DETAILS

SEPTEMBER 2001

STANDARD DRAWING NO. **802–SNCS–03**

ANTHONY L. UREMOVICH REGISTERED No. 18095 STATE OF INDIANA PROFESSIONAL ENGINEER

DESIGN STANDARDS ENGINEER

/s/ Anthony L. Uremovich 9–04–01
DESIGN STANDARDS ENGINEER DATE

/s/ Firooz Zandi 9–04–01
CHIEF HIGHWAY ENGINEER DATE