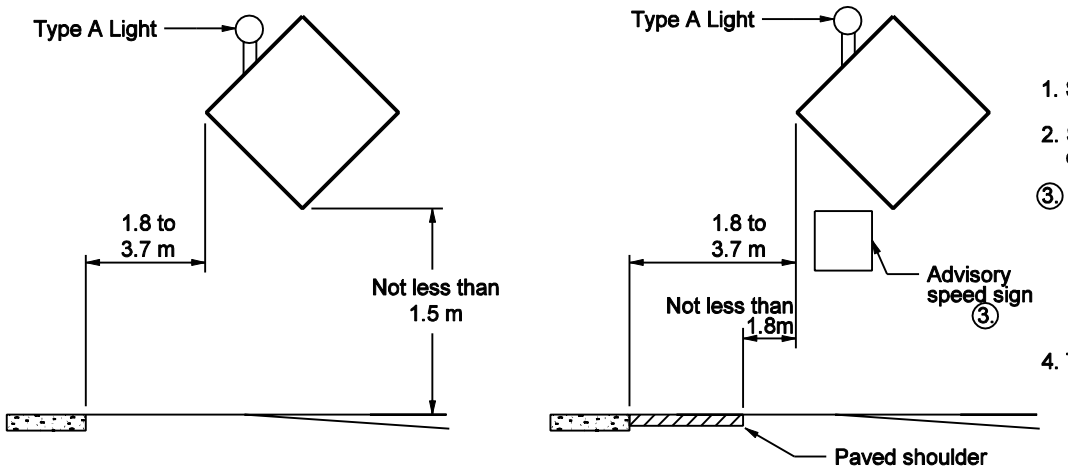

UN-CURBED ROADWAYS

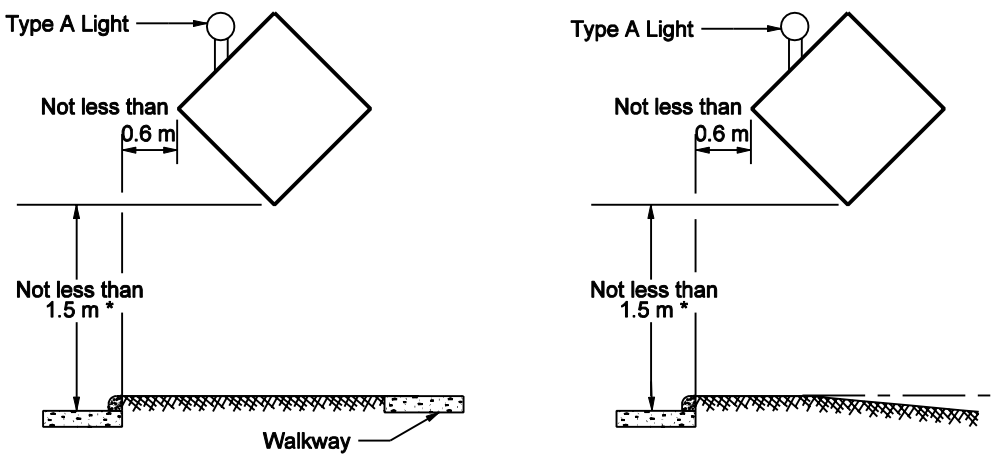

CURBED ROADWAYS

* In urban districts with sidewalks and / or parking, mounting height is not to be less than 7 feet

GENERAL NOTES

1. See Standard Drawing 801-TCSN-11 for additional notes.
2. Signs, lights, and supports shall meet NCHRP 350 crash evaluation criteria.
3. An advisory speed plate, required to be placed with another construction sign, may be mounted on the post closest to the roadway at a height 0.3 m less than the minimum mounting heights shown elswhere on this standard drawing. The bottom of the construction warning sign shall not be lower than the top of the advisory speed plate.
4. Type A warning light required on all construction signs.

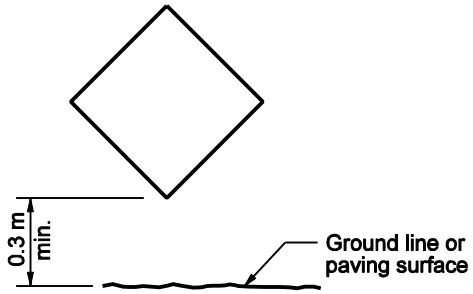

TEMPORARY MOUNTED CONSTRUCTION SIGNS

All Dimension are in mm unless otherwise specfied

INDIANA DEPARTMENT OF TRANSPORTATION

TYPICAL CONSTRUCTION SIGNS MOUNTING

SEPTEMBER 2002

STANDARD DRAWING NO. 801-TCDV-05

RICHARD L. VanCLEAVE REGISTERED No. 9750 STATE OF INDIANA PROFESSIONAL ENGINEER

DESIGN STANDARDS ENGINEER

/s/ Richard L. VanCleave 9-03-02
DESIGN STANDARDS ENGINEER DATE

/s/ Richard K. Smutzer 9-03-02
CHIEF HIGHWAY ENGINEER DATE