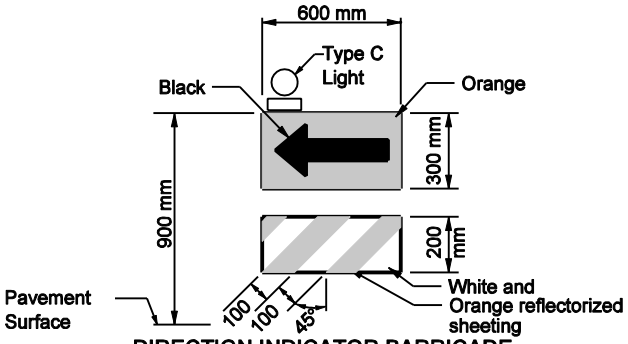

DIRECTION INDICATOR BARRICADE

Use: X

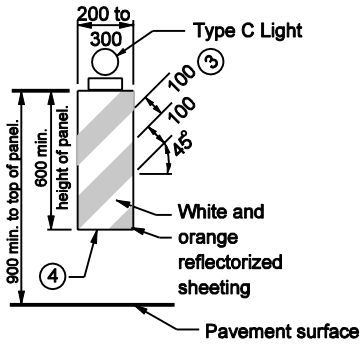

VERTICAL PANEL ⑨

Use: O ⓪

GENERAL NOTES

1. For additional notes and legends see Standard Drawing 801-TCLG-01 or 801-TCDV-02.
2. A Type C warning light will be required on tapers where there is a reduction in the number of lanes and a flashing arrow sign is used..

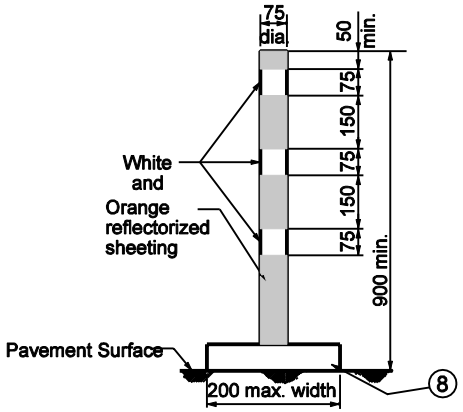

FLEXIBLE TUBULAR MARKER

Use: O X ⊙

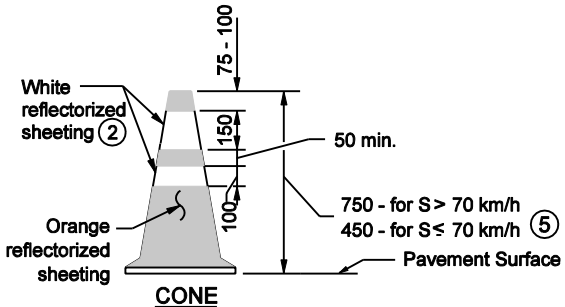

CONE

Use: O X ⊙ X

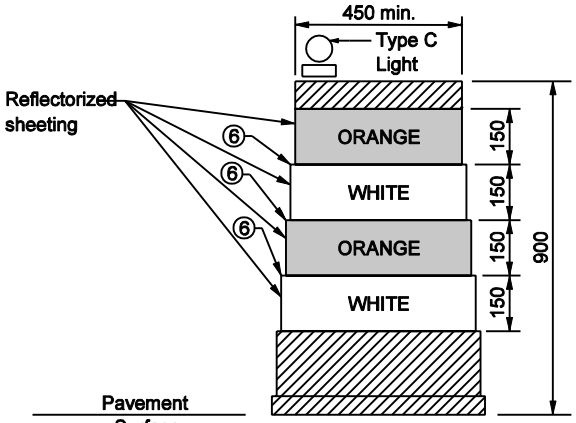

DRUM ⑨

Use: O X

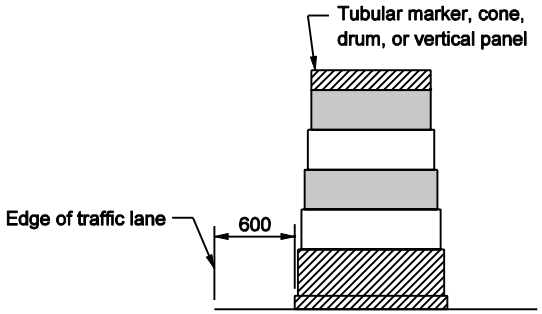

PLACEMENT OF CHANNELIZING DEVICES

All Dimension are in mm unless otherwise specfied

INDIANA DEPARTMENT OF TRANSPORTATION

CHANNELIZING DEVICES

SEPTEMBER 2002

STANDARD DRAWING NO. 801-TCDV-01

RICHARD L. VanCLEAVE REGISTERED No. 9750 STATE OF INDIANA PROFESSIONAL ENGINEER

DESIGN STANDARDS ENGINEER

/s/ Richard L. VanCleave 9-03-02
DESIGN STANDARDS ENGINEER DATE

/s/ Richard K. Smutzer 9-03-02
CHIEF HIGHWAY ENGINEER DATE