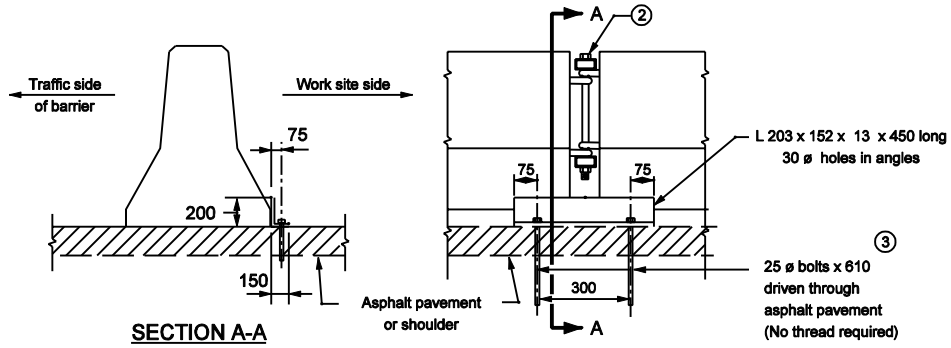

SECTION A-A

BARRIER ANCHORAGE ON ASPHALT PAVEMENT

NOTES :

1. Anchorage against lateral movement is required for temporary concrete barrier located on concrete or asphalt pavement or shoulder where it is on or within 60 ft. of a bridge or where it is used on flared alignments. The method of anchoring shall be as shown.

② For connection details see Standard Drawing 801-TCCB-02.

③ Where barrier is on soil the 25ø anchor bolts shall be 900 long.

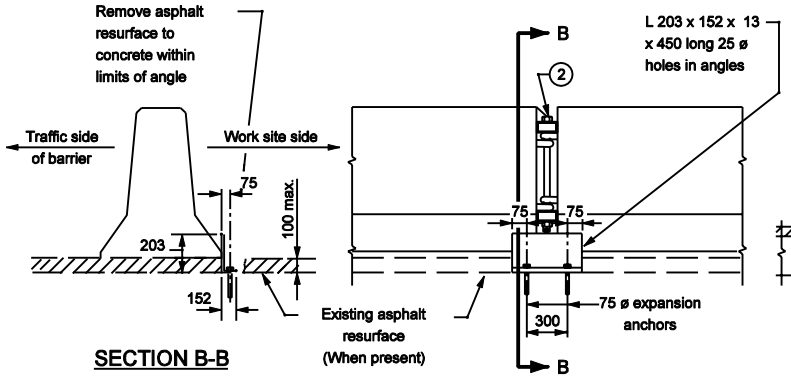

SECTION B-B

BRIDGE FLOORS AND CONCRETE PAVEMENT
STANDARD METHOD

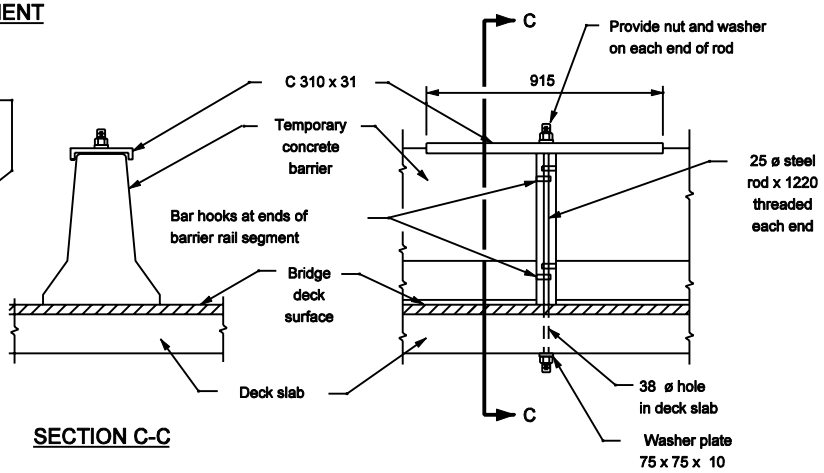

SECTION C-C

BRIDGE FLOOR ONLY
ALTERNATE METHOD

BARRIER ANCHORAGE ON CONCRETE PAVEMENT

All Dimension are in mm unless otherwise specfied

INDIANA DEPARTMENT OF TRANSPORTATION

TEMPORARY CONCRETE BARRIER ANCHORAGE

SEPTEMBER 2002

STANDARD DRAWING NO. 801-TCCB-04

RICHARD L. VanCLEAVE REGISTERED No. 9750 STATE OF INDIANA PROFESSIONAL ENGINEER

DESIGN STANDARDS ENGINEER

/s/ Richard L.VanCleave 9-03-02
DESIGN STANDARDS ENGINEER DATE

/s/ Richard K. Smutzer 9-03-02
CHIEF HIGHWAY ENGINEER DATE