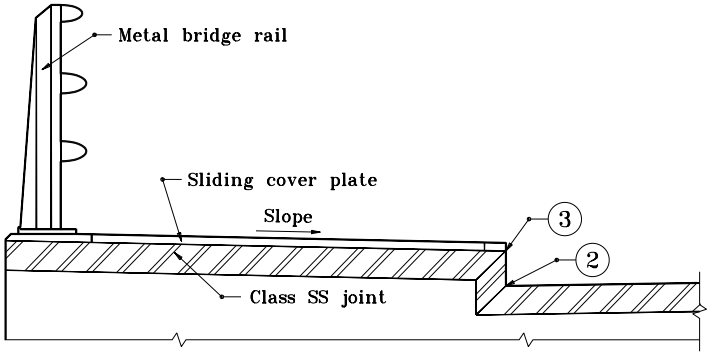

SECTION C–C

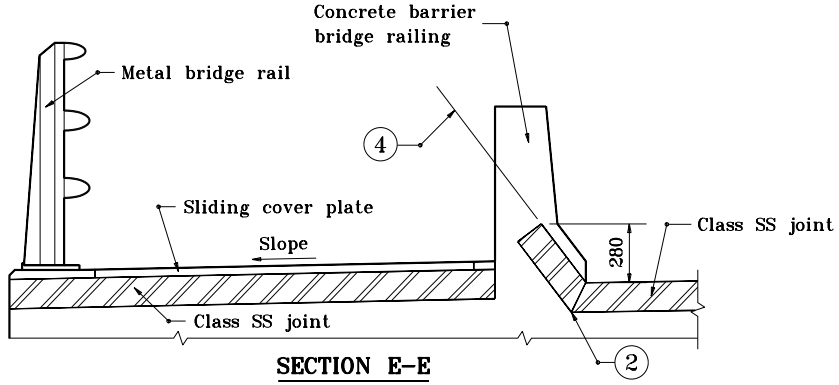

SECTION E–E

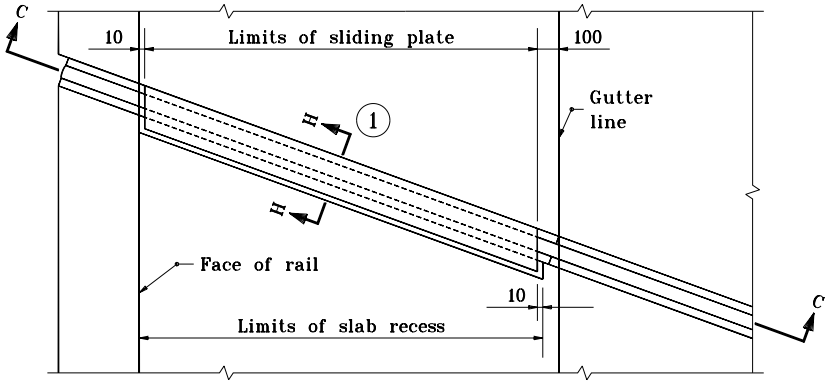

PLAN

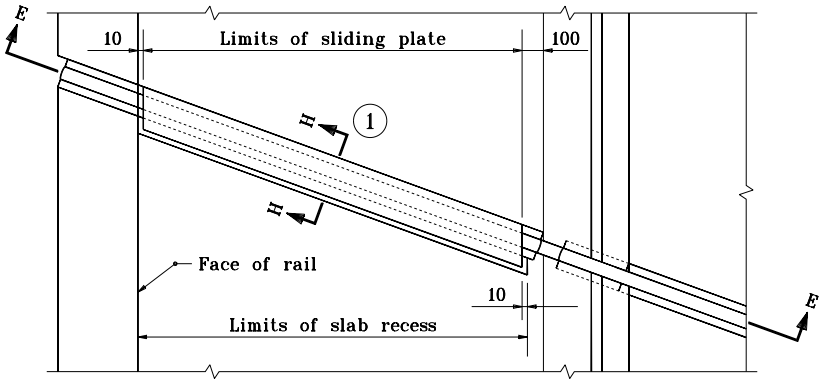

PLAN

SIDEWALKS

All dimensions are in mm unless otherwise specified.

1. For section H–H see sheet number 724–BSSJ–08.
2. The extrusion and plate assemblies with anchors shall be miter cut and shop spliced at this location. A miter cut, vulcanized shop splice will be require in the strip seal at this location.
3. The extrusion and plate assemblies with anchors shall be shop prepared for field welding at this location. A miter cut vulcanized shop splice will be require in the strip seal at this location.
4. The joint shall be placed parallel to the lower sloped face of the rail with a maximum 75 mm depth to the top of the extrusion.

INDIANA DEPARTMENT OF TRANSPORTATION

EXPANSION JOINTS CLASS SS

SEPTEMBER 1994

STANDARD DRAWING NO. **724–BSSJ–06**

ANTHONY L. UREMOVICH REGISTERED No. 18095 STATE OF INDIANA PROFESSIONAL ENGINEER

DESIGN STANDARDS ENGINEER

/s/ Anthony L. Uremovich 9/30/94
DESIGN STANDARDS ENGINEER DATE

/s/ Donald W. Lucas 9/30/94
CHIEF HIGHWAY ENGINEER DATE

Source Sheet: SS–2