GENERAL NOTES

1. PVC pipe shall be 150mm Schedule 40 Class 12454-B.
2. See detail drawings for drain spacings.

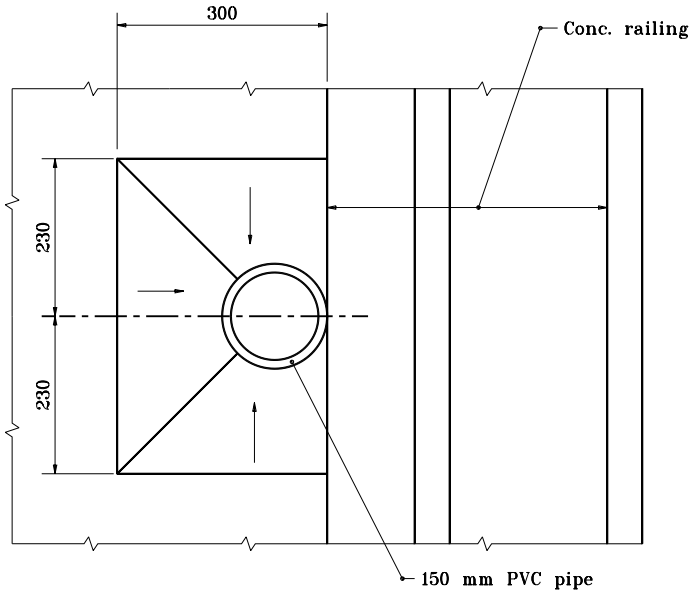

PLAN

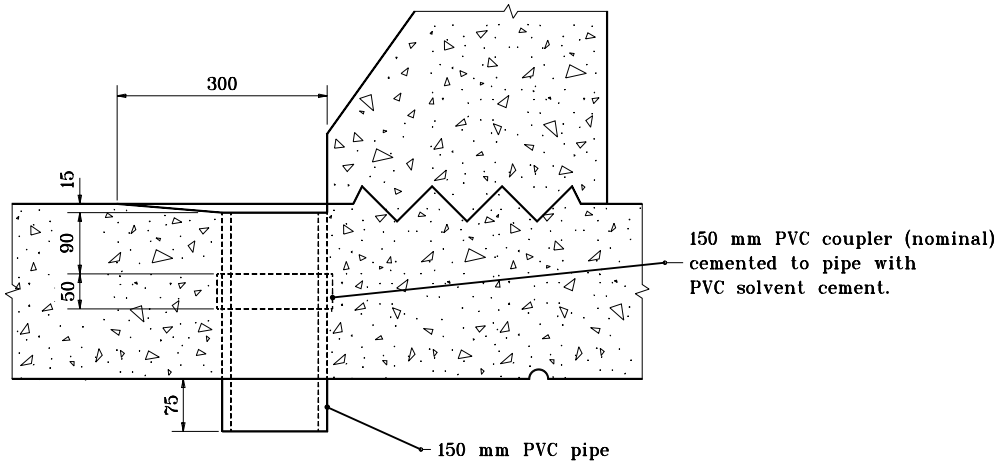

SECTION THRU FLOOR DRAIN

All dimensions are in mm unless otherwise specified.

INDIANA DEPARTMENT OF TRANSPORTATION

SLAB BRIDGE FLOOR DRAIN DETAIL

SEPTEMBER 1994

STANDARD DRAWING NO. **724-BJTS-07**

ANTHONY L. UREMOVICH REGISTERED No. 18095 STATE OF INDIANA PROFESSIONAL ENGINEER

DESIGN STANDARDS ENGINEER

/s/ Anthony L. Uremovich 9/30/94
DESIGN STANDARDS ENGINEER DATE

/s/ Donald W. Lucas 9/30/94
CHIEF HIGHWAY ENGINEER DATE

Source Sheet: C-3