GENERAL NOTES

1. If inlet pipe is required, A_1 and B_1 shall be increased or decreased 300 as directed.
2. 50 dia. pipe drain from bottom of curb to inlet. Aggregate to be placed around inlet end of pipe.
3. 75 min. dia. pipe to be kept open for drainage of subgrade or base until surface is placed.

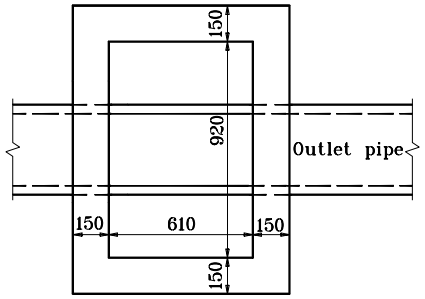

PLAN

INLET TYPE M (CONC.)

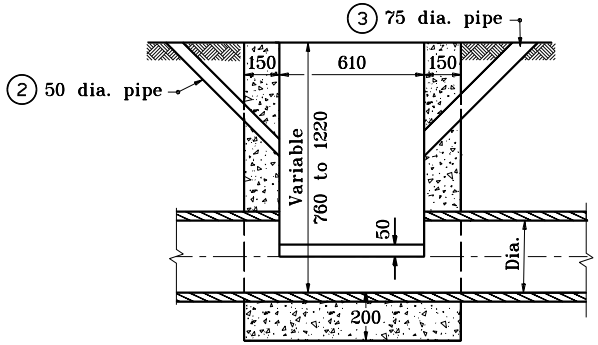

SECTION

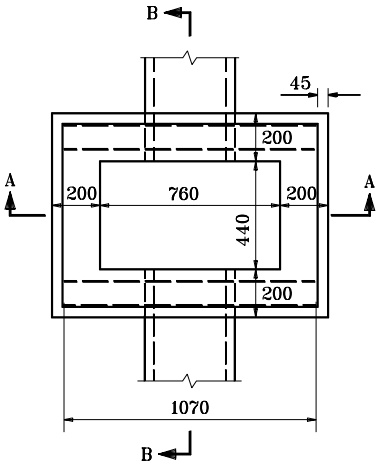

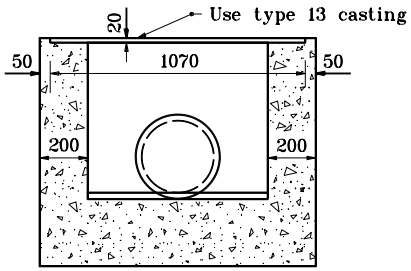

SECTION A–A

INLET TYPE R (CONC.)

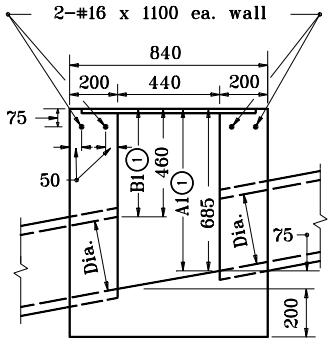

SECTION B–B

All dimensions are in mm unless otherwise specified.

INDIANA DEPARTMENT OF TRANSPORTATION

INLETS TYPE M AND R

SEPTEMBER 1997

STANDARD DRAWING NO. **720–INST–07**

ANTHONY L. UREMOVICH REGISTERED No. 18095 STATE OF INDIANA PROFESSIONAL ENGINEER

DESIGN STANDARDS ENGINEER

/s/ Anthony L. Uremovich 9–01–97
DESIGN STANDARDS ENGINEER DATE

/s/ Donald W. Lucas 9–01–97
CHIEF HIGHWAY ENGINEER DATE

Source Sheet: MD