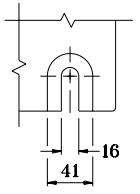


BOLT SLOT DETAIL

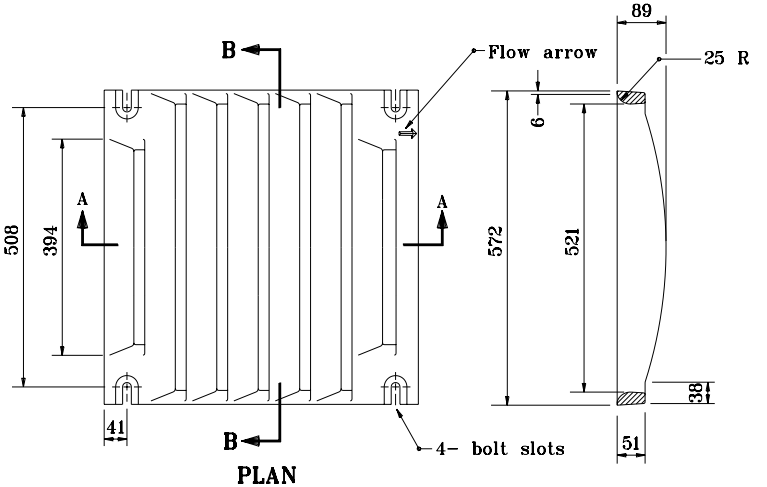


PLAN

SECTION B–B

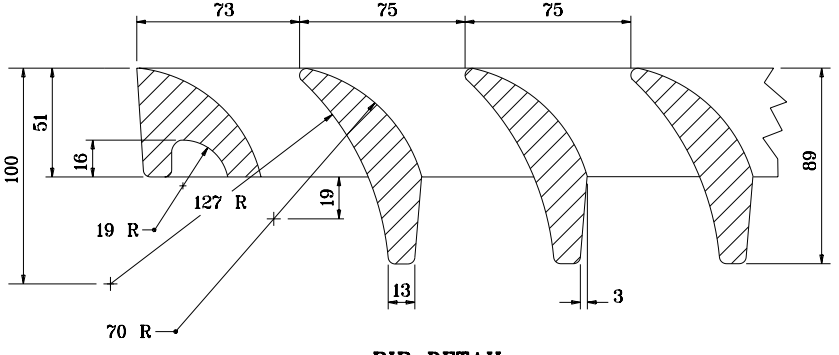


RIB DETAIL

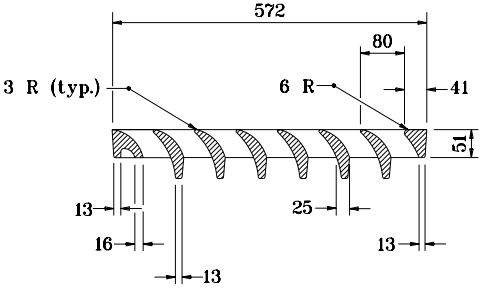


SECTION A–A

All dimensions are in mm unless otherwise specified.

INDIANA DEPARTMENT OF TRANSPORTATION

# CASTING TYPE 15 GRATE

SEPTEMBER 1998

STANDARD DRAWING NO. **720–ICCA–17**

ANTHONY L. UREMOVICH REGISTERED No. 18095 STATE OF INDIANA PROFESSIONAL ENGINEER

DESIGN STANDARDS ENGINEER

/s/ Anthony L. Uremovich 9–01–98
DESIGN STANDARDS ENGINEER DATE

/s/ Donald W. Lucas 9–01–98
CHIEF HIGHWAY ENGINEER DATE

Source Sheet: MC2